10LB TYP ABC FIRE EXTINGUISHER RECESSED CABINET WITH SIGNAGE INSTALLED. FINAL LOCATIONS AND QUANTITIES BY FIRE MARSHALL.

GENERAL CONTRACTOR SHALL VISIT SITE AND ENSURE ALL BIDDING SUBCONTRACTOR'S VISIT SITE PRIOR TO BID. G.C. WILL BE RESPONSIBLE FOR ALL EXISTING CONDITIONS MEETING OR EXCEEDING THOSE DEPICTED WITH PLANS. WHERE EXISTING CONDITIONS ARE NOT AS SHOWN, G,C, SHALL INCLUDE IN BID THE NECESSARY LABOR AND MATERIALS TO ENSURE THE EXISTING SHELL MEETS OR EXCEEDS THE INTENT OF THE CONSTRUCTION PLANS. ALL EXISTING WALLS TO BE RE-USED, EXTERIOR AND OR DEMISING, SHALL BE INSULATED AND DRY WALLED WITH A MIN OF 5/8" TYPE X OR AS LISTED PER PLANS AND BE FINISHED EQUIVALENT TO NEW DRYWALL AND BE PAINT READY. ROOF SHALL HAVE ACCEPTABLE MINIMUM INSULATION INSTALLED OR G.C. SHALL INSTALL.

ALL SUPPLEMENTAL WORK REQUIRED TO ENSURE EXISTING EXTERIOR / INTERIOR / INSULATION TO FINISH TENANT SHELL SHALL BE PROVIDED AS A BID ALTERNATE COST SEPARATED ON G.C. BID.

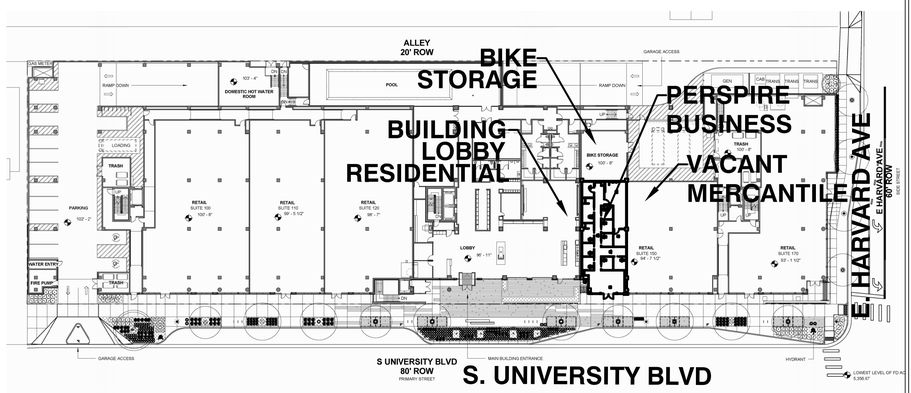

SITE PLAN
NTS

GENERAL CONTRACTOR SHALL BE RESPONSIBLE FOR THE REMOVAL AND DISPOSAL OF ALL CONSTRUCTION WASTE / DEBRIS THROUGHOUT CONSTRUCTION INCLUDING ONE WEEK AFTER SUBSTANTIAL COMPLETION FOR POST CONSTRUCTION EQUIPMENT DELIVERIES.

UNLESS EXPRESSLY NOTED OTHERWISE. G.C. SHALL BE RESPONSIBLE FOR PURCHASE AND INSTALLATION OF ALL COMPONENTS WITHIN PLAN SET.

OCCUPANCY BY AREA USE = 14 OCCUPANTS
OCCUPANCY BY AREA = 1773 SF / 150 = 12 OCCUPANTS

EGRESS ANALYSIS 1005.1 SPRINKLED
STAIRWAYS (N/A) 14 X 0.3 = 4.2 REQUIRED OTHER EGRESS COMPONENTS 14 X 0.2 = 2.8"
1 EXITS REQUIRED UNDER 100 FEET 1 PROVIDED

AS BUSINESS OCCUPANCY, PANIC HARDWARE IS NOT REQUIRED. NORMALLY OPEN FRONT DOOR TO HAVE ACCESSIBLE PUSH BAR. SECONDARY EXITS MAY HAVE PANIC PUSH HARDWARE OR STANDARD ACCESSIBLE LEVER HANDLES THAT OPEN WITH NO SPECIAL KNOWLEDGE.

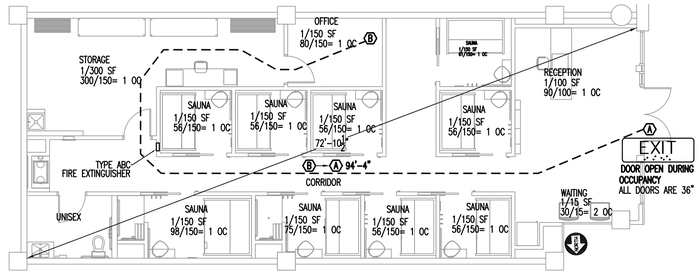

EGRESS PLAN
SCALE 1/8"=1'-0"

EMR ENGINEERING AND DESIGN, PLLC.
THIS ITEM HAS BEEN ELECTRONICALLY SIGNED AND SEALED BY ERIC ENGELL ON THE DATE AND/OR TIME STAMP SHOWN USING A DIGITAL SIGNATURE. PRINTED COPIES OF THIS DOCUMENT ARE NOT CONSIDERED SIGNED AND SEALED AND THE SIGNATURE MUST BE VERIFIED BY A 3RD PARTY CERTIFICATION AUTHORITY ON ANY ELECTRONIC COPY.

Digitally signed by Eric Engell
Date: 2023.09.14 07:54:18 -04'00'

GENERAL NOTES

1. GENERAL CONTRACTOR WILL BE RESPONSIBLE FOR A PROFESSIONALLY COMPLETE TENANT IMPROVEMENT WITHIN THE ADDRESS LISTED ON THESE PLANS.
2. ALL PRINTED INFORMATION CONTAINED IN THESE CONSTRUCTION DRAWINGS ARE THE SOLE PROPERTY OF PERSPIRE. COPIES ARE TO BE USED FOR THE EXCLUSIVE PURPOSE OF CONSTRUCTING SITE SPECIFIC PERSPIRE FACILITIES. ANY OTHER USE MAY VIOLATE THE COPYRIGHT LAWS OF THE UNITED STATES.
3. THE DESIGNER, FCDADSON, FRANCHISEE, OR PERSPIRE ASSUME NO RESPONSIBILITY OR LIABILITY FOR THE USE OF THESE DOCUMENTS FOR ANY PURPOSE OTHER THAN SPECIFICALLY AUTHORIZED BY THE AFORE MENTIONED AND SIGNED AND SEALED FOR THE SPECIFIC LOCATION IN THE STATE SHOWN ON THE DRAWINGS AND SEAL.
4. ALL CONSTRUCTION WORK, INCLUDING BUT NOT LIMITED TO, PLUMBING, MECHANICAL AND ELECTRICAL, WORKING CONDITIONS, MATERIALS AND METHODS SHALL BE IN COMPLIANCE WITH ALL APPLICABLE STATE AND LOCAL BUILDING CODES.
5. PRIOR TO SUBMITTING BIDS OF ANY TYPE, THE CONTRACTOR SHALL VISIT THE SITE TO BECOME THOROUGHLY FAMILIAR, NOT ONLY WITH THE PROPOSED SCOPE OF WORK, BUT ALSO WITH THE SPECIFIC REQUIREMENTS AS TO PROCEDURES THE FRANCHISEE OR THE LANDLORD EXPECTS THE CONTRACTOR(S) TO FOLLOW DURING CONSTRUCTION. THIS REFERS TO ACCESS TO THE SPACE, TRASH REMOVAL DURING CONSTRUCTION, PARKING OF CONSTRUCTION VEHICLES, DELIVERIES, STORAGE, STAGING AREAS, AND ANY OTHER ITEMS NECESSARY TO COMPLY WITH ALL ASPECTS OF THE LEASE AND TENANT OBLIGATIONS.
6. THE CONTRACTOR SHALL BE RESPONSIBLE FOR COORDINATING THE WORK OF ALL TRADES AND SHALL CHECK ALL DIMENSIONS. ANY DISCREPANCIES SHALL BE CALLED TO THE ATTENTION OF FCDADSON AND SHALL BE RESOLVED BEFORE PROCEEDING WITH THE WORK.
7. CAREFULLY REVIEW LOCATION AND CONDITIONS OF ALL UTILITIES TO BE FURNISHED FOR THE SPACE AND VERIFY LOCATIONS FURNISHED BY THE LANDLORD/UTILITY COMPANIES AS SHOWN ON THE DRAWINGS.
8. ANY DETAILS OR NOTES REQUIRING FIELD VERIFICATION BY THE CONTRACTOR ARE TO BE DONE DURING THE BID PROCESS. DISCREPANCIES FOUND AFTER THE GENERAL CONTRACTOR IS SELECTED WILL BE THE RESPONSIBILITY OF THE GENERAL CONTRACTOR AND CORRECTED AT THE GENERAL CONTRACTOR'S EXPENSE.
9. SPECIAL ATTENTION SHALL BE GIVEN TO EXISTING AREAS SURROUNDING THE EXTERIOR OF THE PROJECT SPACE. ALL CONSTRUCTION AND INSTALLED EQUIPMENT, WALKS, AND LANDSCAPED AREAS SHALL BE PROTECTED AND GUARDED BY BARRIERS OR OTHER MEANS NECESSARY TO PROTECT AREAS FROM DAMAGE DURING CONSTRUCTION. ALL AREAS DAMAGED WILL BE RESTORED TO THEIR ORIGINAL CONDITION PRIOR TO FINAL PAYMENT AT THE SOLE EXPENSE OF THE GENERAL CONTRACTOR
10. INSTALL SAFETY BARRIERS DURING CONSTRUCTION AS NECESSARY TO PROTECT THE PUBLIC FROM INJURY AND ACCESS TO THE SITE. REVIEW SPECIFIC REQUIREMENTS WITH THE LANDLORD'S TENANT COORDINATOR PRIOR TO BEGINNING CONSTRUCTION.
11. TEMPORARY SERVICES REQUIRED DURING CONSTRUCTION SHALL BE AT THE SOLE EXPENSE OF THE CONTRACTOR, UNLESS OTHERWISE AGREED UPON.
12. THE GENERAL CONTRACTOR SHALL BE SOLELY RESPONSIBLE TO SECURE AND PROTECT FROM DAMAGE, ALL ITEMS ON THE PREMISES. INCLUDING, BUT NOT LIMITED TO; CONSTRUCTION MATERIALS, LIGHT FIXTURES, FOOD SERVICE EQUIPMENT, EQUIPMENT, AND THE FURNITURE PACKAGE. AFTER RECEIPT ON JOB SITE, ANY LOST, STOLEN OR ITEMS DAMAGED LATER BY SUBCONTRACTORS OR OTHERS IN THE BUILDING, SHALL BE REPLACED OR REPAIRED AT THE GENERAL CONTRACTOR'S SOLE EXPENSE. THE GENERAL CONTRACTOR SHOULD NOTIFY AND RELATE THIS INFORMATION AND REQUIREMENT TO ALL TRADES AND SUBCONTRACTORS ON SITE.
13. IT IS THE RESPONSIBILITY OF THE GENERAL CONTRACTOR TO RECEIVE AND UNLOAD PRODUCT AND MATERIALS SUPPLIED BY OTHERS AT THE JOB SITE. IMMEDIATELY INSPECT DELIVERED PRODUCTS AND EQUIPMENT FOR SHIPPING DAMAGE, INCLUDING CONCEALED DAMAGE PRIOR TO SHIPPER LEAVING PREMISES. ANY PRODUCT OR MATERIALS FOUND TO BE DAMAGED AFTER THE SHIPPER HAS LEFT THE PREMISES, WILL BE THE SOLE RESPONSIBILITY OF THE GENERAL CONTRACTOR TO REPLACE. RECORD ANY SHORTAGES, DAMAGED OR DEFECTIVE MATERIALS. SAVE ALL PACKING OF DAMAGED PRODUCTS UNTIL CLAIMS ARE FINALIZED. IMMEDIATELY NOTIFY FCDADSON, FRANCHISEE AND PERSPIRE PM OF ANY DAMAGED MATERIALS RECEIVED. IMMEDIATELY FILE A DAMAGE CLAIM WITH THE APPROPRIATE SHIPPING COMPANY.
14. THE GENERAL CONTRACTOR SHALL MAINTAIN A CURRENT AND COMPLETE SET OF CONSTRUCTION DOCUMENTS ON THE JOB SITE DURING ALL PHASES OF CONSTRUCTION FOR USE BY THE TRADES AND SHALL PROVIDE SUBCONTRACTORS WITH CURRENT CONSTRUCTION DOCUMENTS AS REQUIRED.
15. DRAWINGS MAY NOT ALWAYS BE TO SCALE. NOTED DIMENSIONS SHALL TAKE PRECEDENCE.
16. DIMENSIONS ON CONSTRUCTION DRAWINGS ARE TO THE FACE OF FINISH, UNLESS OTHERWISE NOTED. THE GENERAL CONTRACTOR SHALL NOT SCALE THE DRAWINGS.
17. ALL NOTES THROUGHOUT THESE CONSTRUCTION DRAWINGS APPLY TO ALL SHEETS WHERE APPLICABLE.
18. WORK LISTED, SHOWN, OR IMPLIED ON THE CONSTRUCTION DRAWINGS SHALL BE SUPPLIED BY THE GENERAL CONTRACTOR EXCEPT WHERE OTHERWISE NOTED. THE GENERAL CONTRACTOR SHALL CLOSELY COORDINATE HIS WORK WITH THAT OF OTHER CONTRACTORS OR VENDORS TO ASSURE THAT SCHEDULES ARE MET AND THAT THE WORK IS DONE IN CONFORMANCE TO MANUFACTURER'S REQUIREMENTS.
19. DRAWINGS INDICATE GENERAL AND TYPICAL DETAILS OF CONSTRUCTION. WHERE CONDITIONS ARE NOT SPECIFICALLY INDICATED BUT ARE OF SIMILAR CHARACTER TO DETAILS SHOWN, SIMILAR DETAILS OF CONSTRUCTION SHALL BE USED.
20. ALL CHANGES TO THESE DOCUMENTS MUST BE APPROVED BY PERSPIRE AND FCDADSON.
21. NO MATERIAL SUBSTITUTIONS WILL BE PERMITTED UNLESS WRITTEN AUTHORIZATION HAS BEEN GRANTED BY FCDADSON OR PERSPIRE. ANY MATERIAL SUBSTITUTIONS WITHOUT AUTHORIZATION WILL SUBJECT THE GENERAL CONTRACTOR TO REPLACEMENT OF SUCH SUBSTITUTED MATERIALS WITH APPROVED MATERIALS AT THE SOLE EXPENSE OF THE GENERAL CONTRACTOR.
22. THE SUBCONTRACTORS SHALL REMOVE RUBBISH AND WASTE MATERIALS ON A REGULAR BASIS AND SHALL EXERCISE STRICT CONTROL OVER JOB CLEANING TO PREVENT DIRT, DEBRIS OR DUST FROM AFFECTING THE FINISHED INTERIOR OR EXTERIOR OF THE JOB SITE.
23. ALL MATERIALS AND WORKMANSHIP SHALL BE GUARANTEED FOR A PERIOD OF ONE (1) YEAR FROM CERTIFICATE OF OCCUPANCY FRANCHISEE MAY WITHHOLD FINAL PAYMENT UNTIL GENERAL CONTRACTOR SUPPLIES FRANCHISEE WITH A WARRANTY LETTER AND SUBCONTRACTORS LIEN WAIVERS.
24. GENERAL CONTRACTOR SHALL HIRE A PROFESSIONAL CLEANING COMPANY FOR FINAL CLEAN UP INCLUDING STRIPPING AND WAXING OF VCT/SVT AND CLEANING OF LVP/LVT PER MANUFACTURER BEFORE TURNING COMPLETED STORE OVER TO FRANCHISEE.
25. GENERAL CONTRACTOR AND HIS JOB SUPERVISOR SHALL TEST ALL EQUIPMENT FOR PROPER OPERATION, IN THE PRESENCE OF THE FRANCHISEE, BEFORE TURNING COMPLETED STORE OVER TO FRANCHISEE.
26. GENERAL CONTRACTOR SHALL PROVIDE THE FRANCHISEE WITH TWO (2) COPIES OF A MAINTENANCE MANUAL UPON COMPLETION OF THE STORE. THE FRANCHISEE MAY CHOOSE TO WITHHOLD FINAL PAYMENT SHOULD THE GENERAL CONTRACTOR FAIL TO PROVIDE A MAINTENANCE MANUAL.
27. TEN DAYS BEFORE CONSTRUCTION COMMENCEMENT, THE GENERAL CONTRACTOR SHALL PROVIDE FCDADSON WITH A DETAILED AND COMPLETE CONSTRUCTION SCHEDULE. THE SCHEDULE SHOWING ALL TRADES WITH STARTING AND COMPLETION DATES. A COMPLETE LIST OF ALL SUBCONTRACTORS MUST ALSO BE INCLUDED WITH THE SCHEDULE. THE GENERAL CONTRACTOR IS TO NOTIFY ALL PARTIES IN RECEIPT OF PROJECT SCHEDULE IF ANY CHANGES OCCUR WHICH AFFECT THE COMPLETION DATE. FAILURE TO COMPLETE THE PROJECT AS SCHEDULED, MAY RESULT IN PENALTIES INCURRED BY THE GENERAL CONTRACTOR REGARDING FINAL PAYMENT.
28. GENERAL CONTRACTOR TO SCOPE EXISTING SANITARY SEWER FOR VERIFICATION OF LINE CONDITION FROM THE TENANT SPACE TO THE EXTERIOR MAIN LATERAL AS REQUIRED. GENERAL CONTRACTOR TO PROVIDE VIDEO DOCUMENTATION OF EXISTING CONDITIONS TO FCDADSON.

DRAWING INDEX

1.00	COVER SHEET
1.01	EXISTING ACCESSIBLE PARKING
1.02	LIFE SAFETY PLAN
1.03	FRAMING PLAN
1.04	FRAMING DETAILS
1.05	ACCESSIBLE DETAILS
1.06	ACCESSIBLE FLOOR PLAN
1.07	REFLECTED CEILING PLAN
1.08	CEILING DETAILS
1.09	WALL AND FLOOR FINISH PLAN
1.10	FURNITURE PLAN
1.11	INTERIOR ELEVATIONS
1.12	INTERIOR ELEVATIONS
1.13	TOILET ROOM PLANS / DETAILS AND ELEVATIONS
1.14	ARCHITECTURAL SPECIFICATION
2.01	ELECTRICAL LIGHTING PLAN
2.02	ELECTRICAL POWER PLAN
2.03	ELECTRICAL PANELS
2.03A	ELECTRICAL ONE LINE DIAGRAM
2.04	ENERGY COMPLIANCE
3.01	HVA/C PLAN AND SCHEDULES
3.02	HVA/C DETAILS
4.01	SANITARY SEWER PLAN AND SCHEDULES
4.02	DOMESTIC WATER PLAN
4.03	PLUMBING DETAILS
4.04	NOT USED
4.05	PLUMBING SPECIFICATION
5.01	SCHEMATIC SPRINKLER (DIFFERED SUBMITTAL)

TENANT IMPROVEMENT

OCCUPANCY	BUSINESS
CONSTRUCTION TYPE	TYPE 11B SPRINKLED
BUILDING HEIGHT	1 STORY
FIRE ALARM	YES
INTERIOR FINISH CEILING HEIGHT	11 FEET
AREA GROSS/NET	1860 / 1773 SQUARE FEET
TOTAL OCCUPANCY	14 OCCUPANTS
EXIT(S) WIDTH PROVIDED	36" MINIMUM
MINIMUM EXIT(S) REQUIRED	1
EXIT(S) PROVIDED	1

PLUMBING FIXTURE REQUIREMENTS

WATER CLOSETS/LAVATORIES REQUIRED 1 UNISEX

WATER CLOSETS/ LAVATORIES– 1 UNISEX PROVIDED.

MOP SINK / 0–REQUIRED / 1–PROVIDED

HI–LOW DRINKING FOUNTAIN / NOT REQUIRED / PROVIDED – N/A
A FILTERED WATER DISPENSER IS INSTALLED AT ACCESSIBLE HEIGHT

CODE TABLE

2020 NATIONAL ELECTRICAL CODE
2021 INTERNATIONAL BUILDING CODE (IBC)
2021 INTERNATIONAL EXISTING BUILDING CODE (IEBC)
2021 INTERNATIONAL PLUMBING CODE (IPC)
2021 INTERNATIONAL MECHANICAL CODE (IMC)
2021 INTERNATIONAL FUEL GAS CODE (IFGC)
2021 INTERNATIONAL FIRE CODE (IFC)
2021 INTERNATIONAL ENERGY CONSERVATION CODE (IECC)
2022 DENVER BUILDING AND FIRE CODE (DBC OR DBCA)
REFERENCE STANDARDS PER 2021 ICC CODES
CURRENT ADA AND 2017 ANSI A117.1

ALL INTERIOR FINISHES AND INTERIOR FLOOR FINISHES SHALL COMPLY WITH THE CURRENT BUILDING CODE.

PROJECT SCOPE

PREVIOUSLY A EXISTING FIRST GENERATION SHELL SPACE
TO BE FINISHED INTO A PERSPIRE SAUNA STUDIO – BUSINESS OCCUPANCY. EXISTING HVAC WITH NEW DISTRIBUTION.
NEW PARTITION WALLS, FLOORING AND FINISHES. EXISTING ELECTRICAL POWER WITH NEW DISTRIBUTION. NEW LIGHTING.
EXISTING SANITARY SEWER AND DOMESTIC WATER STUBS TO BE RE–USED WITH NEW DISTRIBUTION AND PLUMBING CONNECTIONS.

QUESTIONS
PROJECT / CONSTRUCTION COORDINATOR
f.c. dadson.inc.
N1043 CRAFTSMEN DR.
SUITE 2
GREENVILLE, WI 54942
Phone: 920-757-1486
FAX: 920-757-1492

BIDDING QUESTIONS CONTACT 920-757-1486

CONTRACTOR SHALL FIELD VERIFY ALL EXISTING CONDITIONS AND DIMENSIONS PRIOR TO BID AND REPORT ANY DISCREPANCIES BACK TO OWNER. G.C. SHALL COORDINATE ALL SUB CONTRACTORS AND ENSURE A COMPLETE FULLY CODE COMPLIANT AND PROFESSIONALLY FINISHED TENANT SPACE.

ISSUED / REVISIONS:

ENGINEERING AND DESIGN PLLC
PO Box 213 (Kelling)
4236 HWY 36S0
Annville, KY 40402
Phone (606)-364-2886
Fax (606)-364-5100
E-Mail: eric@emrengineers.com
Web Address: emrengineers.com
FIRM 23179

COLORADO REGISTERED ERIC ENGELL 36557 PROFESSIONAL ENGINEER 9.13.23

PERSPIRE SAUNA STUDIO
2450 SOUTH UNIVERSITY BLVD
SUITE
DENVER, CO 80210

CHECKED BY:	Staff
DRAWN BY:	Staff
DATE:	SEPTEMBER 12, 2023
SCALE:	PER PLAN
PROJECT No.:	PSS 2401
SHEET TITLE	**COVER SHEET**
SHEET No.	**1.00**

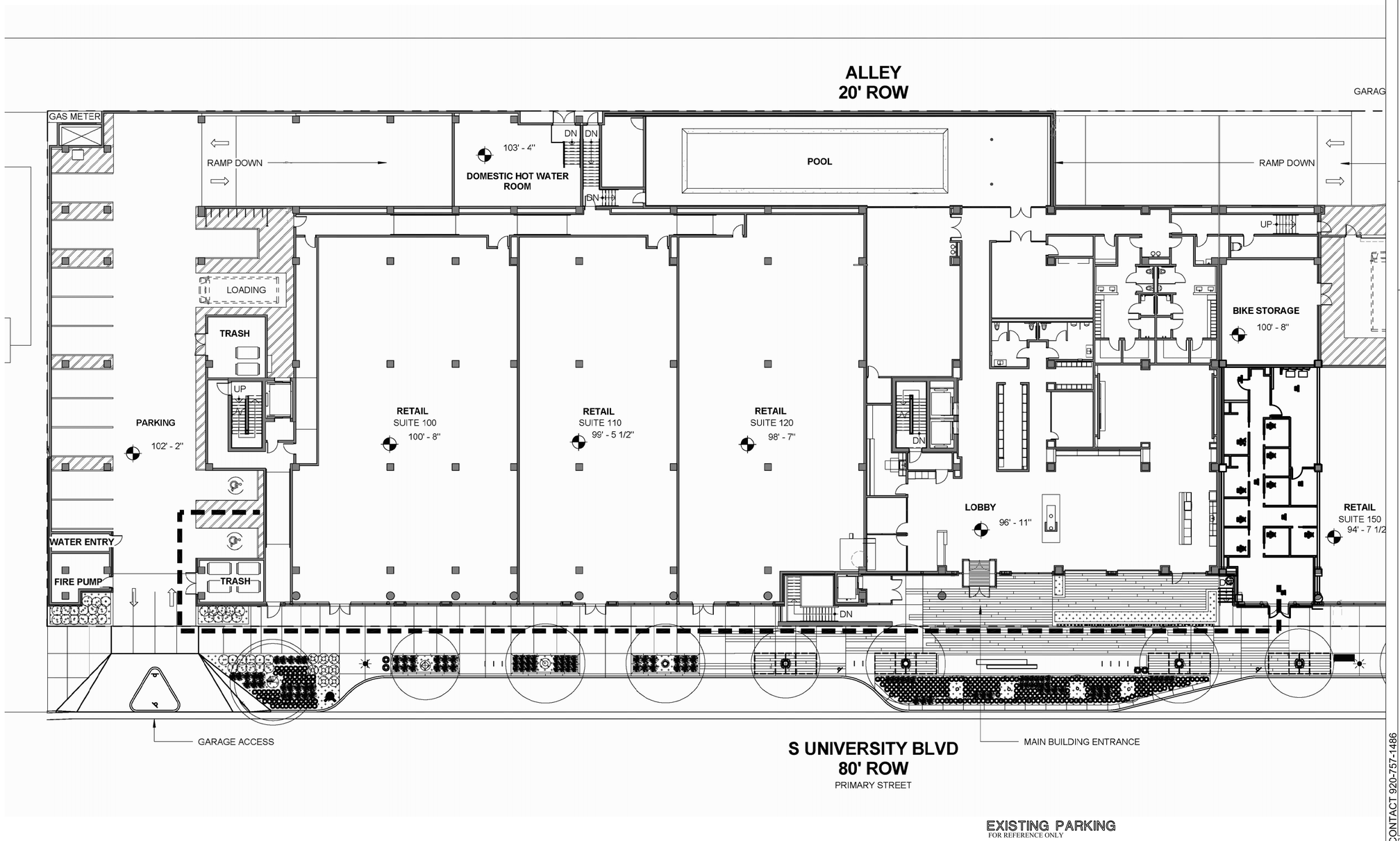

EXISTING PARKING
FOR REFERENCE ONLY

CONTRACTOR SHALL FIELD VERIFY ALL EXISTING CONDITIONS AND DIMENSIONS PRIOR TO BID AND REPORT ANY DISCREPANCIES BACK TO OWNER. G.C. SHALL COORDINATE ALL SUB CONTRACTORS AND ENSURE A COMPLETE FULLY CODE COMPLIANT AND PROFESSIONALLY FINISHED TENANT SPACE.

ISSUED / REVISIONS:

ENGINEERING AND DESIGN PLLC
PO Box 213 (Nelling)
4236 HWY 3650
Annville, KY 40402
Phone (606)-364-2886
Fax (606)-364-5100
E-Mail: eric@emrengineers.com
Web Address: emrengineers.com
FIRM 23179

COLORADO REGISTERED
ERIC EYGEN
36557
9.13.23
PROFESSIONAL ENGINEER

PERSPIRE SAUNA STUDIO

2450 SOUTH UNIVERSITY BLVD
SUITE 101
DENVER, CO 80210

BIDDING QUESTIONS CONTACT 920-757-1486

CHECKED BY:	Staff
DRAWN BY:	Staff
DATE:	SEPTEMBER 12, 2023
SCALE:	PER PLAN
PROJECT No.:	PSS 2401

SHEET TITLE
EXISTING ACCESSIBLE SITE PLAN

SHEET No.
1.01

EMERGENCY LIGHTING LEGEND

	TYPE	DESCRIPTION	MANUFACTURER	MODEL NO.	LAMPS
RH	RH	EXTERIOR REMOTE EMERGENCY HEAD	BEST	RHLED1-WP	INTEGRAL
WALL MOUNT ONLY EM	EM	EMERGENCY LIGHT WITH 90 MINUTE BATTERY BACKUP WALL MOUNTED 12" BELOW CEILING. MAX 108"AFF	BEST	LEDR1	INTEGRAL
EX/EM WALL MOUNT ONLY	EM	COMBINATION EXIT / EMERGENCY LIGHT FIXTURE WITH 90 MINUTE BATTERY BACKUP	BEST	CXTEU2GWRC	INTEGRAL
EX WALL MOUNT ONLY	EX	EXIT LIGHT FIXTURE WITH 90 MINUTE BATTERY BACKUP	BEST	EX T E U 2 G W – EM	INTEGRAL

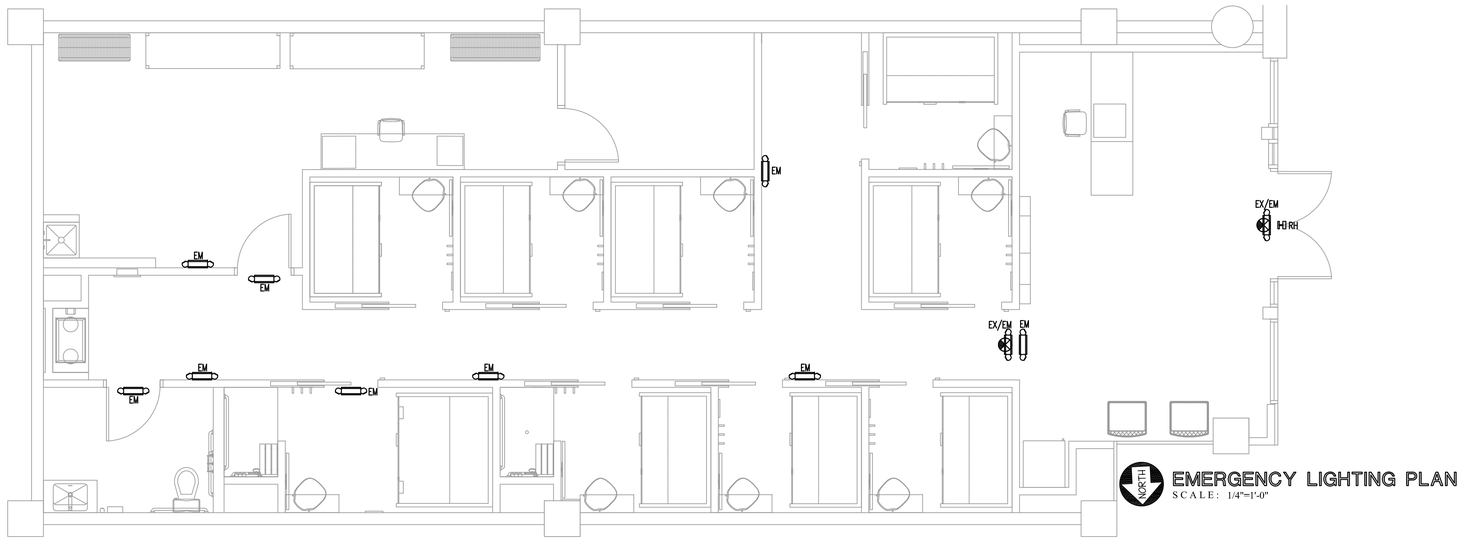

EMERGENCY LIGHTING PLAN
SCALE: 1/4"=1'-0"

OCCUPANCY BY AREA USE = 14 OCCUPANTS
OCCUPANCY BY AREA = 1773 SF / 150 = 12 OCCUPANTS

EGRESS ANALYSIS 1005.1 SPRINKLED
STAIRWAYS (N/A) 14 X 0.3 = 4.2 REQUIRED OTHER EGRESS COMPONENTS 14 X 0.2 = 2.8"
1 EXITS REQUIRED UNDER 100 FEET 1 PROVIDED

AS BUSINESS OCCUPANCY, PANIC HARDWARE IS NOT REQUIRED. NORMALLY OPEN FRONT DOOR TO HAVE ACCESSIBLE PUSH BAR. SECONDARY EXITS MAY HAVE PANIC PUSH HARDWARE OR STANDARD ACCESSIBLE LEVER HANDLES THAT OPEN WITH NO SPECIAL KNOWLEDGE.

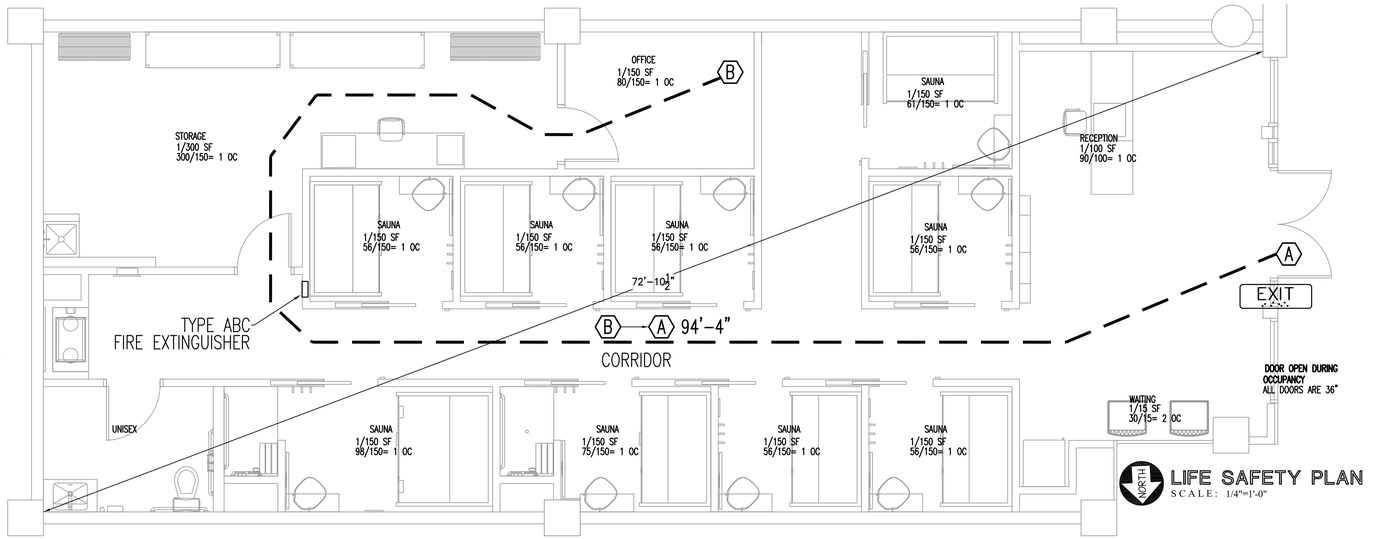

LIFE SAFETY PLAN
SCALE: 1/4"=1'-0"

CONTRACTOR SHALL FIELD VERIFY ALL EXISTING CONDITIONS AND DIMENSIONS PRIOR TO BID AND REPORT ANY DISCREPANCIES BACK TO OWNER. G.C. SHALL COORDINATE ALL SUB CONTRACTORS AND ENSURE A COMPLETE FULLY CODE COMPLIANT AND PROFESSIONALLY FINISHED TENANT SPACE.

ISSUED / REVISIONS:

ENGINEERING AND DESIGN PLLC
PO Box 213 (Welling)
4236 HWY 3650
Annville, KY 40402
FIRM 23179
Phone (606)-364-2886
Fax (606)-364-5100
E-Mail: eric@emrengineers.com
Web Address: emrengineers.com

COLORADO REGISTERED
ERIC EYGEN
36557
9.13.23
PROFESSIONAL ENGINEER

BIDDING QUESTIONS CONTACT 920-757-1486

PERSPIRE SAUNA STUDIO

2450 SOUTH UNIVERSITY BLVD
SUITE 101
DENVER, CO 80210

CHECKED BY:	Staff
DRAWN BY:	Staff
DATE:	SEPTEMBER 12, 2023
SCALE:	PER PLAN
PROJECT No.:	PSS 2401

SHEET TITLE
LIFE SAFETY PLAN

SHEET No.
1.02

GENERAL NOTES

1. G.C. SHALL FIELD VERIFY / INSPECT AND REPORT ON THE CONDITION OF EXISTING SHELL COMPONENTS. EXTERIOR WALLS, STOREFRONT, GLAZING DOORS ETC. WHERE EXISTING CONDITIONS WILL NOT MEET OR EXCEED NEW LEVEL OF FINISH, G.C. SHALL PROVIDE BID ALTERNATE FEE TO REPAIR, REFURBISH OR REPLACE EXISTING EXTERIOR COMPONENTS.
2. G.C. SHALL FIELD VERIFY AND INSPECT INTERIOR SHELL COMPONENTS. ALL SHELL WALLS SHALL BE INSULATED WITH A MINIMUM OF R11 BATT INSULATION AND BE COVERED WITH 5/8" GYPSUM BOARD FINISHED TO A MINIMUM OF LEVEL 4 SMOOTHNESS. ROOF ASSEMBLY SHALL BE INSULATED WITH A MINIMUM OF R30. WHERE NOT EXISTING G.C. SHALL PROVIDE BID ALTERNATE FEE TO PROVIDE AND INSTALL.
3. ALL FLOORS SHALL BE LEVELED, CLEANED AND PREPARED TO RECEIVE NEW FINISHES.
4. ALL DIMENSIONS SHOWN ARE TO FACE OF FINISHED DRYWALL.
5. SEE ELEVATION SHEETS FOR ADDITIONAL INFORMATION REGARDING FRAMING AND BLOCKING REQUIREMENTS.
6. G.C. SHALL BE RESPONSIBLE FOR PLUMBING TRENCHES (CORING AS REQUIRED) AND REPOUR OF FLOOR. DOWEL AND POUR BACK EQUAL TO OR BETTER THAN EXISTING SLAB. FINISH SMOOTH, READY TO RECEIVE NEW FLOORING.
7. G.C. SHALL ENSURE ALL SUBCONTRACTORS BIDDING VISIT SITE PRIOR TO BIDDING. G.C. WILL BE RESPONSIBLE FOR ALL EXISTING CONDITIONS MEETING OR EXCEEDING THOSE DEPICTED WITHIN THE PLAN SET. WHERE CONDITIONS ARE NOT AS SHOWN, G.C. SHALL INCLUDE A BID ALTERNATE FEE TO ENSURE EXISTING CONDITIONS MEET OR EXCEED THE INTENT OF THE PLANS

NEW 1 LAYER 5/8" GYPSUM WALLBOARD APPLIED PARALLEL TO EACH SIDE OF 3-5/8" STEEL STUDS 16" O.C WITH 1" TYPE S DRYWALL SCREWS 8" O.C. AT VERTICLE JOINTS AND 12" O.C. AT FLOOR/CEILING AND INTERMEDIATE STUDS. STAGGER JOINTS ON EACH SIDE AND OPPOSITE SIDES. NEW WALLS TO 3" ABV. CEILING, BRACED TO STRUCTURE INSTALL 3" MINERAL FIBER SOUND BATTS.

NEW 1 LAYER 5/8" GYPSUM WALLBOARD APPLIED PARALLEL TO EACH SIDE OF 6" STEEL STUDS 16" O.C WITH 1" TYPE S DRYWALL SCREWS 8" O.C. AT VERTICLE JOINTS AND 12" O.C. AT FLOOR/CEILING AND INTERMEDIATE STUDS. STAGGER JOINTS ON EACH SIDE AND OPPOSITE SIDES. NEW WALLS TO 3" ABV. CEILING, BRACED TO STRUCTURE INSTALL 3" MINERAL FIBER SOUND BATTS.

G.C. TO PROVIDE BLOCKING FOR ALL A.D.A. GRAB BARS AND FIXTURE / CABINET SUPPORTS

WALL LEGEND

DOOR SCHEDULE

DOORS AND FRAMES TO BE FINISHED PER SHEET 1.09, FINISH SCHEDULE
THE BOTTOM 10" OF ALL DOORS SHALL HAVE A SMOOTH, UNINTERUPTED SURFACE
G.C. TO PROVIDE BLOCKING FOR ALL A.D.A. GRAB BARS AND FIXTURE / CABINET SUPPORTS

1 EXISTING FRONT EGRESS DOOR
- EXISTING (2) 3'-0" X 7'-0" STOREFRONT ENTRY DOOR. REFURBISH TO LIKE NEW
- HANDICAP ACCESSIBLE COMPLIANT PANIC HARDWARE / PUSH PULL HARDWARE. INSTALL NEW BASED ON EXISTING CONDITION
- THERE SHALL BE NO SPECIAL KNOWLEDGE REQUIRED TO OPEN AN EXIT DOOR FROM INSIDE THE SPACE.
- ALL EXIT DOORS SHALL OPEN OUTWARD, BE SELF CLOSING AND FIT TIGHTLY.
- EXIT DOOR TO REMAIN UNLOCKED DURING ALL OPERATING HOURS.
- SIGN SHALL BE POSTED ON EGRESS SIDE OF DOOR STATING " THIS DOOR TO REMAIN UNLOCKED WHEN BUILDING IS OCCUPIED". SIGN TO HAVE 1" LETTERS ON CONTRASTING BACKGROUND"
- MANUALLY OPERATED FLUSH BOLTS OR SURFACE BOLTS ARE NOT PERMITTED.
- AUTOMATIC FLUSH BOLTS ARE PERMITTED.

2 EXISTING REAR EGRESS DOOR
- EXISTING 3'-6" X 7'-0" INSULATED STEEL EXTERIOR DOOR (REFURBISH TO LIKE NEW OR REPLACE BASED ON CONDITION)
- [illegible] HARDWARE. INSTALL NEW BASED ON EXISTING CONDITION
- THERE SHALL BE NO SPECIAL KNOWLEDGE REQUIRED TO OPEN AN EXIT DOOR FROM INSIDE THE SPACE.
- ALL EXIT DOORS SHALL OPEN OUTWARD, BE SELF CLOSING AND FIT TIGHTLY.
- FRAMES PAINTED PT3
- FINISH TO MATCH ADJACENT FINISHES.1 FLOOR STOP - BALDWIN 4010

NOT USED

3
- TOILET ROOM DOOR PAINTED PT2
- 3'-0" X 7'-0" X 1-3/4"
- SOLID CORE FLUSH PANEL WITH WOOD VENEER, PAINT READY, SEE FINISH SCHEDULE
- KNOCK DOWN METAL FRAMES PAINTED PT3
- 3 HINGES - HAGER
- 1 FLOOR STOP - BALDWIN 4010
- 1 LEVER TYPE PRIVACY SET US32D FINISH (ACCESSIBLE COMPLIANT) HAGER 3500 SERIES OR EQUAL LEVER HANDLE AUGUST STYLE. FUNCTION NUMBER 40. LATCH-BOLT OPERATED BY LEVER FROM EITHER SIDE OUTSIDE LEVER IS LOCKED BY PUSH BUTTON AND UNLOCKED BY EMERGENCY RELEASE OUTSIDE OR OPERATING INSIDE LEVER.

4 UTILITY DOOR PAINTED PT2
- 3'-0" X 7'-0" X 1-3/4" **4A** 2'-0" X 7'-0" X 1-3/4"
- SOLID CORE FLUSH PANEL WITH WOOD VENEER, PAINT READY, SEE FINISH SCHEDULE
- KNOCK DOWN METAL FRAMES PAINTED PT3
- HINGES - HAGER
- 1 FLOOR STOP - BALDWIN 4010
- 1 LEVER TYPE PASSAGE SET US32D FINISH (ACCESSIBLE COMPLIANT) HAGER 3500 SERIES OR EQUAL LEVER HANDLE AUGUST STYLE. FUNCTION NUMBER F75

5 ACCESSIBLE POCKET DOOR PAINTED PT2
KNOCK DOWN METAL FRAMES PAINTED PT3
- 3'-0" X 7'-0" X 1-3/4" FIBERGLASS DOOR
- ROOM TEMPERATURES MAY EXCEED 100°F. ENSURE DOOR CAPABLE OF WITHSTANDING HIGH TEMPS)
- HAGER 9850 POCKET DOOR TRACK AND INSTALLATION KIT (WITH 9634 OPTION) OR APPROVED EQUAL
- HEAVY DUTY COMMERCIAL POCKET DOOR FRAME (125 LBS PLUS).
- TRICYCLE HANGERS AND JUMP-ROOF TRACK, STIFFENERS
- SELF ADJUSTING FLOOR ANCHORS AND STOPS
- ADJUST FRAMING TO ACCOMMODATE POCKET DOOR AND TO MEET ACCESSIBILITY REQUIREMENTS.
- POCKET DOOR CAN NOT FULLY RECESS INTO FRAME
- DOOR FACE SHALL HAVE HANDLE THAT ALLOW THE DOOR TO BE OPERATED WITHOUT GRASPING
- PROVIDE ACCURATE ADAP2001-5 PRIVACY SLIDING DOOR HARDWARE SET US32D
- P SERIES TIMELY POCKET DOOR FRAMES, PAINTED PT3.

WHERE SLIDING DOORS ARE IN THE FULLY OPEN POSITION, OPERATING HARDWARE SHALL BE EXPOSED AND USABLE FROM BOTH SIDES. (11B-404.2.7)
ALL SLIDING DOORS SHALL HAVE MINIMUM CLEARANCE OF 32 INCHES IN OPEN POSITION.

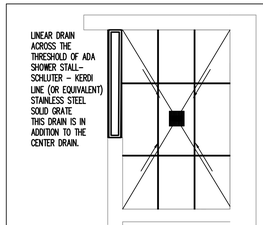

SHOWER TILE LAYOUT

WATER MACHINE MOUNTING

4.4 Mounting Height Dimensions

1. The suggested water dispenser mounting height to the center of the water dispenser sensor (C) is 47 inches (1194 mm). This height can be adjusted higher or lower depending on the desires of the user.

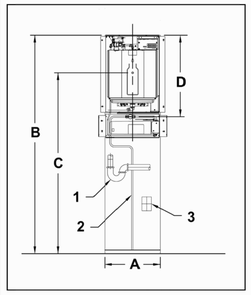

Plumbing and Electrical Key
1) P-trap. 2) 3/8 inch flexible water tubing. (3) Electrical box.

Recommended Opening Dimensions
The overall wall opening is 14-1/2 inches (368 mm) wide (A) by 55-3/4 inches high (B), top of the unit to the floor.

Unit Height (from floor)
B) 55-3/4 inches (1441 mm).

Height (from floor) to Bottle Filler Sensor
C) 47 inches (1194 mm).

Note Item 1: *If the p-trap is sealed within the wall, under the water dispenser, all the plumbing joints must be glued. The glue must be appropriate for the PVC pipe utilized. If the p-trap uses threaded components, they must be easily accessible.*

Note Item 2: *According to most electrical codes, the electrical box **cannot** be sealed inside a wall cavity with no access. If the electrical connection is placed under the unit, a user-supplied removable wall cover will be required to access the junction box.*

4.5 Water Dispenser Installation

There are several installation options available:

- Water dispenser with attached filter box and filter.
- Water dispenser with a remote filter.
  Note: When the filter is located in a remote location, mount the filter vertically on a wall or other supporting structure.
- Water dispenser with remote filter and chiller.
  Note: When the filter is located in a remote location, mount the filter vertically on a wall or other supporting structure before the water chiller.
- Water dispenser with optional waste drain.

Use the following sections to install the water dispenser using the appropriate configuration.

4.5.1 Installing Water Dispenser into the Wall

1. Cut the opening into the wall using the suggested mounting dimensions as a guide.
2. Place the unit into the wall cavity and slide it up against the drywall at the top of the opening. The unit is designed with 1/4 inch overlap to conceal any irregularities at the top of the wall opening.

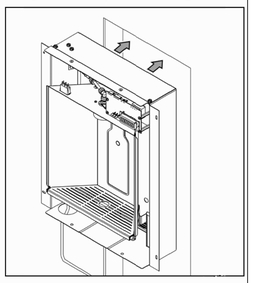

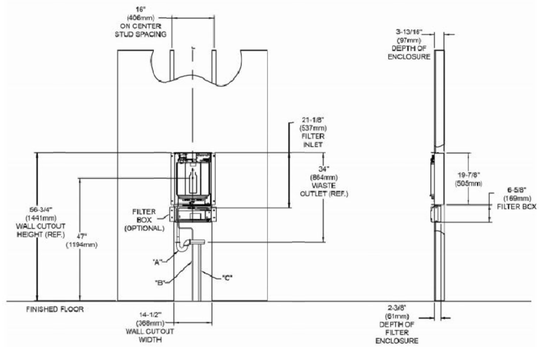

LEGEND:
A = Recommended location for waste outlet (optional), 1-1/4" (32mm) trap not furnished.
B = Recommended location for 3/8" (10mm) water inlet, to connect with 3/8" (10mm) shut off valve in filter box.
C = Recommended location for electrical supply. It is recommended that the supply be on dedicated 15a Hospital Grade GFCI breaker.

KEY NOTES:

1. DEMISING WALL TO BE FINISHED TO LEVEL 4 READY FOR PAINT. TENANT SIDE ONLY. MAINTAIN EXISTING WALL FIRE RATING IF ANY.
2. WHERE EXISTING EXTERIOR DOORS ARE REUSED. REFURBISH TO LIKE NEW CONDITION, COMPLETE WITH ALL REQUIRED COMPONENTS; SWEEP, WEATHER STRIPPING, THRESHOLD ETC. WHERE NECESSARY BASED ON EXISTING CONDITION G.C. SHALL REPLACE WITH ALL NEW. ALL HARDWARE TO MEET OR EXCEED ALL CODE AND ACCESSIBILITY REQUIREMENTS. FINAL INSTALLATION SHALL BE COMPLETE, OPERABLE AND CODE COMPLIANT, ACCESSIBLE, PROFESSIONAL INSTALLATION AS NEW.
3. SEE ELEVATIONS FOR ADDITIONAL BLOCKING REQUIREMENTS. G.C. SHALL COORDINATE WITH FCO TO ENSURE ALL BLOCKING IS IN PLACE AND READY FOR INSTALLATION OF CABINETS AND SHELVING.
4. WALL TO BE 5/8" MOISTURE/MOLD RESISTANT GYP. ALL WALLS IN TOILET ROOMS.
5. UNDERCUT DOOR(S) 1" FOR AIR TRANSFER
6. INSTALL FIRE TREATED 2X8 BLOCKING CAPABLE OF HOLDING A MINIMUM OF 300 LBS FOR GRAB BAR INSTALLATION.
7. G.C. SHALL INSPECT AND REPORT CONDITION OF EXISTING EXTERIOR COMPONENTS; STOREFRONT / DOORS / GLAZING ETC. WHERE EXISTING WILL NOT MEET OR EXCEED NEW LEVEL OF FINISH, G.C. SHALL PROVIDE BID ALTERNATE COST LINE ITEM WITHIN BID TO REPAIR / REFURBISH / REPLACE EXISTING EXTERIOR COMPONENTS.
8. FRAMING NOTE: INCLUDE 24"X24" CEILING ACCESS PANELS IN LOBBY. LOBBY CEILING ACCESS PANEL TO BE LOCATED FOR EXTERIOR SIGN VENDOR TO GAIN ACCESS TO INSIDE OF STOREFRONT FOR ANY FINAL WIRE CONNECTION OR MAINTENANCE NEEDED LATER TO THE E.C. JUNCTION BOX FOR THE EXTERIOR SIGN. COORDINATE FINAL LOCATION IN FIELD
9. HEADER ABOVE OPENING AT 7'-3" AFF.
10. SEE CEILING PLAN RCP FOR DRYWALL CEILING HEIGHT FRAMING.
11. HEADER ABOVE OPENING AT 7'-3" AFF.
12. COORDINATE IN FIELD FOR INSTALLATION OF VENTILATED ACCESS PANEL TO WATER MACHINE.
13. WALLS TO BE FRAMED PER MANUFACTURER DETAIL ON SHEET 1.11 FOR ACCESS TO DOORS FROM THE TOWEL DROP TO THE STORAGE ROOM. WALLS TO BE FINISHED PER MANUFACTURER SPECIFICATIONS.

FINISH TRIM CARPENTER TO INSTALL RED CEDAR BOARDS IN RECESSED WALL CAVITIES. (NOTE: RECESS IS CREATED BY THICKNESS OF 5/8" DRYWALL)

RED CEDAR BOARD TO BE FLUSH TO FINISHED GYP BOARD WHEN INSTALLED.

AT AREAS THAT ARE TIGHT TO CEILING OR AT ADJACENT WALLS, TRANSITION FROM SIDING TO WALL OR CEILING SHOULD BE FIT TO CREATE AN EVEN FINISHED APPEARANCE. TOP RED CEDAR BOARD MAY BE RIPPED FOR PROPER FITMANT.

DRYWALL TO BE CAPPED WITH U-CHANNEL TO CREATE A CLEAN STRAIGHT CLEAN EDGE TRANSITION FROM THE DRYWALL TO THE CEDAR BOARDS. U-CHANNEL MUST NOT BE VISIBLE. FLOAT MUD TO HIDE U-CHANNEL TRANSITION, PAINT TO MATCH ADJACENT WALL, INCLUDING INSIDE EDGE OF U-CHANNEL IN THE RECESS.

EDGE CUTS TO BE STRAIGHT AND STACKING FOR AN EVEN FINISHED APPEARANCE.

GC TO LEAVE ¼" GAP BETWEEN CEDAR BOARDS AND AT TRANSITION TO GYP BOARD.

OWNER TO SUPPLY CEDAR BOARD MATERIAL IN 8' AND 10' LINEAR LENGTHS TO BE CUT AND FIT ONSITE BY GC AS NEEDED

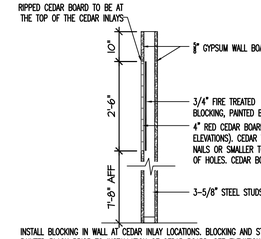

INSTALL BLOCKING IN WALL AT CEDAR INLAY LOCATIONS. BLOCKING AND STUD FACE TO BE PAINTED BLACK PRIOR TO INSTALLATION OF CEDAR BOARD. SEE ELEVATIONS FOR ADDITION INFORMATION AND CONFIRMATION OF LOCATIONS TO BE INSTALLED. SEE ADJACENT NOTES.

1.03 TYPICAL RED CEDAR PANELED WALL

TV WALL MOUNT TO BE RECESSED AT TIME OF FRAMING. SEE EQUIPMENT SCHEDULE AND POWER PLAN FOR ELECTRICAL OUTLET LOCATIONS.
STUD MUST BE CENTERED ON MOUNT TO ALLOW ACCESS TO THE BOX CUTOUTS FOR OUTLETS/DATA TO BE MOUNTED WITHIN THE MOUNT.

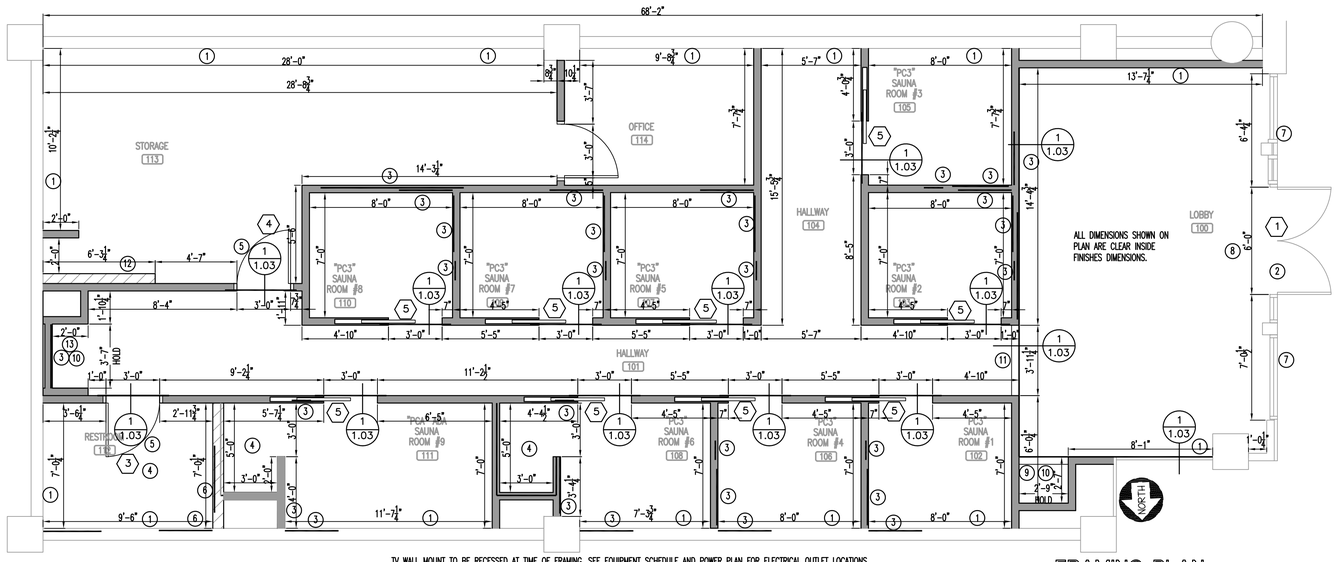

TV WALL MOUNT TO BE RECESSED AT TIME OF FRAMING. SEE EQUIPMENT SCHEDULE AND POWER PLAN FOR ELECTRICAL OUTLET LOCATIONS.
STUD MUST BE CENTERED ON MOUNT TO ALLOW ACCESS TO THE BOX CUTOUTS FOR OUTLETS/DATA TO BE MOUNTED WITHIN THE MOUNT.

FRAMING PLAN

SCALE: 1/4"=1'-0"

CONTRACTOR SHALL FIELD VERIFY ALL EXISTING CONDITIONS AND DIMENSIONS PRIOR TO BID AND REPORT ANY DISCREPANCIES BACK TO OWNER. G.C. SHALL COORDINATE ALL SUB CONTRACTORS AND ENSURE A COMPLETE FULLY CODE COMPLIANT AND PROFESSIONALLY FINISHED TENANT SPACE.

ISSUED / REVISIONS:

ENGINEERING AND DESIGN PLLC
PO Box 213 (Nelling)
4236 HWY 36S0
Annville, KY 40402
FIRM 23179
Phone (606)-364-2886
Fax (606)-364-5100
E-Mail: eric@emrengineers.com
Web Address: emrengineers.com

COLORADO REGISTERED PROFESSIONAL ENGINEER 36557 9.13.23

PERSPIRE SAUNA STUDIO
2450 SOUTH UNIVERSITY BLVD
SUITE 201
DENVER, CO 80210

BIDDING QUESTIONS CONTACT 920-757-1486

CHECKED BY:	Staff
DRAWN BY:	Staff
DATE:	SEPTEMBER 12, 2023
SCALE:	PER PLAN
PROJECT No.:	PSS 2401

SHEET TITLE
FRAMING PLAN & DETAILS

SHEET No.
1.03

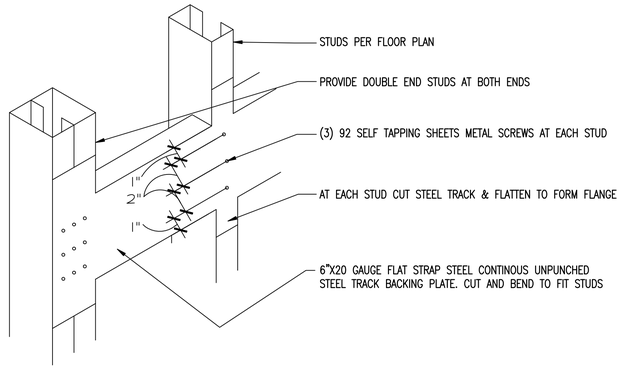

PROVIDE AT ALL ADA REQUIRED COMPONENTS, CASEWORK, SHELVING AND EQUIPMENT BLOCKING SHALL SUPPORT A MINIMUM 250 POUND LOAD.

1 WALL BACKING PLATE N.T.S

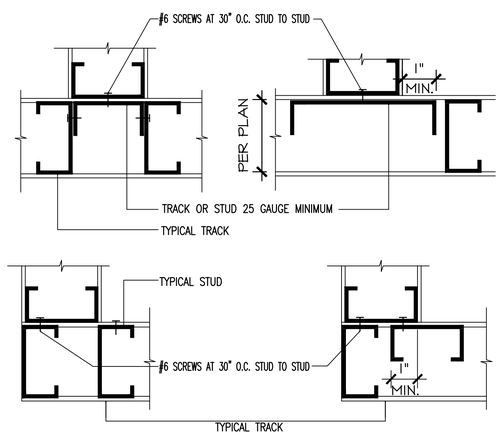

3 TYPICAL FRAMING CONDITIONS N.T.S

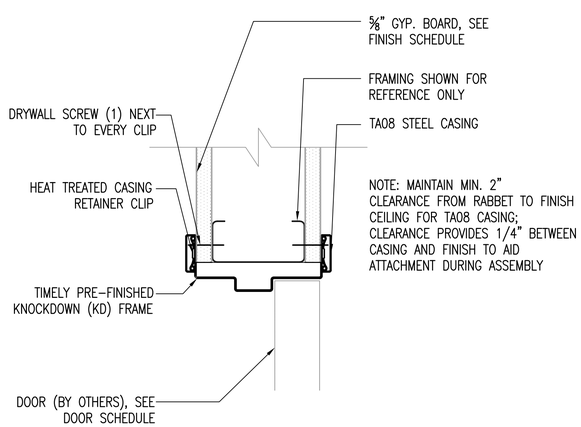

4 TYPICAL INTERIOR DOOR HEADER N.T.S

NOTE:
-REFER TO ELEVATIONS FOR FINISH INFORMATION.
-EXTEND WALL FINISHES TO DECK WHEN CEILING IS 'OPEN TO STRUCTURE'

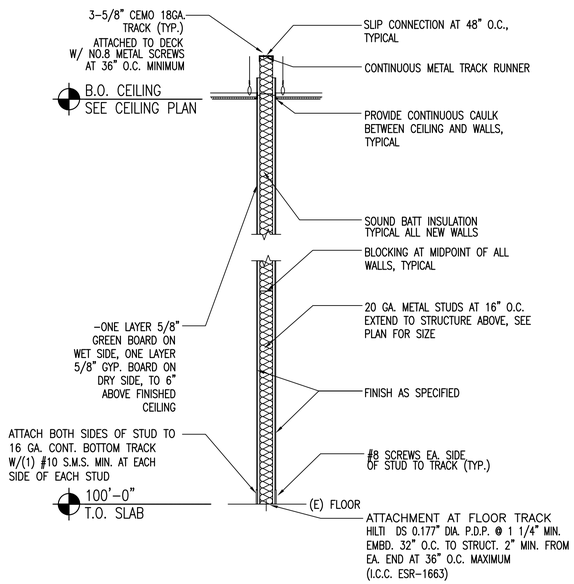

5 TYPICAL STUD WALL N.T.S

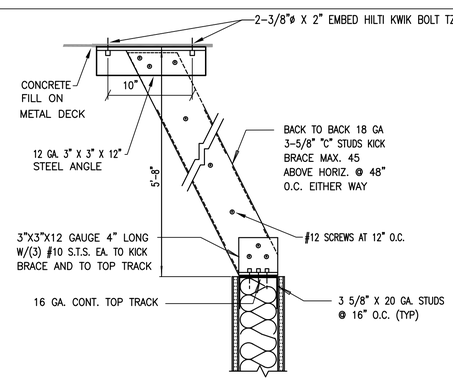

6 TYPICAL WALL BRACING N.T.S

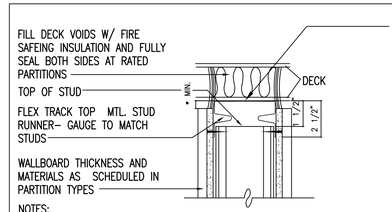

NOTES:
WALLBOARD SHALL BE FASTENED TO TOP HORIZONTAL RUNNER LEG BELOW BELLOWS.

FIRE TAPE ALL DRYWALL JOINTS ABOVE CEILINGS. SEAL AROUND ALL PENETRATIONS THRU OR INTO WALLS.

PROVIDE FIRE STOP CAULKING AT ALL U.L. RATED PARTITIONS.

PROVIDE ACOUSTICAL SEALANT AT ALL ACOUSTICAL PARTITIONS. (TYP. AT FULL HEIGHT WALLS)

7 FULL HEIGHT WALL AT STRUCTURE N.T.S

SPAN TABLE

NON BEARING STUD SIZES AT 16" O.C. WITH FLEXIBLE (DRYWALL) FINISH (L/120)

STUD SIZE	MAXIMUM FLANGE BRACE SPACING	ALLOWABLE HEIGHT
362WCS20	2'-6"	11'-0"
4WCS20	2'-6"	12'-0"
6WCS20	3'-0"	17'-0"

NON BEARING STUD SIZES AT 16" O.C. WITH BRITTLE (TILE) FINISH (L/360)

STUD SIZE	MAXIMUM FLANGE BRACE SPACING	ALLOWABLE HEIGHT
362WCS20	2'-6"	16'-0"
4WCS20	2'-6"	18'-0"
6WCS20	3'-0"	20'-0"

SINGLE SPAN CEILING JOISTS AT 16" O.C. WITH ONE LAYER GYP. BOARD (10LB/SF TOTAL LOAD)

JOIST SIZE	CONTINUOUS LATERAL SUPPORT OF COMPRESSION FLANGE
6WCS20	12'-7"
8WCS18	17'-6"

ALLOWABLE BRACED LENGTHS

MAXIMUM STUD HEIGHT	STUD TYPE	SPACING
9'-0"	3-5/8"X25 GA	16" OR 24" O.C.
10'-0"	3-5/8"X20 GA	16" OR 24" O.C.
12'-0"	3-5/8"X20 GA	16" OR 24" O.C.
16'-0"	3-5/8"X20 GA	16" O.C.
18'-0"	3-5/8"X20 GA	16" O.C.
20'-0"	6"X20" GA	16" OR 24" O.C.
24'-0"	6"X20" GA	16" O.C.
30'-0"	6"X18" GA	16" O.C.
30'-0"	6"X16" GA	24" O.C.
40'-0"	8"X16" GA	16" O.C.
40'-0"	8"X14" GA	24" O.C.

8 FRAMING TABLES N.T.S

GC to furnish and install the heavy duty vanity support during framing Bracket required to be mounted to the stud within the wall prior to GYP and tile to support the floating end of the vanity. Upon fixture installation, GC to connect the support the underside of the vanity counter top.Vendor: A&M Hardware Part # EC(2.0) **18**

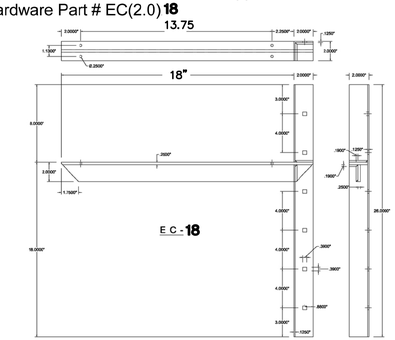

9 VANITY BLOCKING DETAIL COORDINATE WITH FCD SHOP DWGS N.T.S

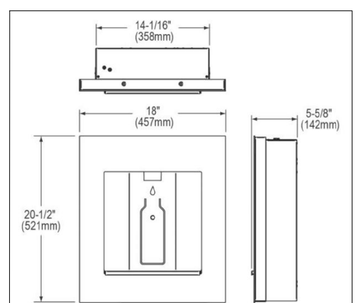

10 WATER MACHINE FRAMING N.T.S

CONTRACTOR SHALL FIELD VERIFY ALL EXISTING CONDITIONS AND DIMENSIONS PRIOR TO BID AND REPORT ANY DISCREPANCIES BACK TO OWNER. G.C. SHALL COORDINATE ALL SUB CONTRACTORS AND ENSURE A COMPLETE FULLY CODE COMPLIANT AND PROFESSIONALLY FINISHED TENANT SPACE.

ISSUED / REVISIONS:

ENGINEERING AND DESIGN PLLC
PO Box 213 (Nelling)
4236 HWY 36S0
Annville, KY 40402
FIRM 23179
Phone (606)-364-2886
Fax (606)-364-5100
E-Mail: eric@emrengineers.com
Web Address: emrengineers.com

COLORADO REGISTERED PROFESSIONAL ENGINEER 36557 9.13.23

BIDDING QUESTIONS CONTACT 920-757-1486

PERSPIRE SAUNA STUDIO

2450 SOUTH UNIVERSITY BLVD
SUITE D
DENVER, CO 80210

CHECKED BY:	Staff
DRAWN BY:	Staff
DATE:	SEPTEMBER 12, 2023
SCALE:	PER PLAN
PROJECT No.:	PSS 2401

SHEET TITLE
FRAMING DETAILS

SHEET No.
1.04

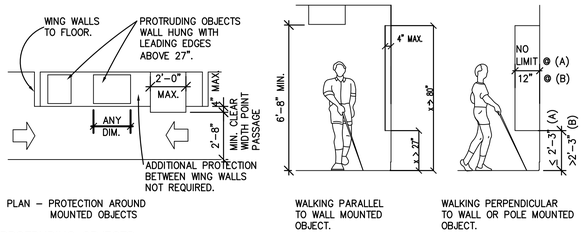

PLAN – PROTECTION AROUND MOUNTED OBJECTS

WALKING PARALLEL TO WALL MOUNTED OBJECT.

WALKING PERPENDICULAR TO WALL OR POLE MOUNTED OBJECT.

PROTRUDING OBJECTS

SEE SECTION 307 OF THE TAS FOR ADDITIONAL REQUIREMENTS ON PROTRUDING OBJECTS

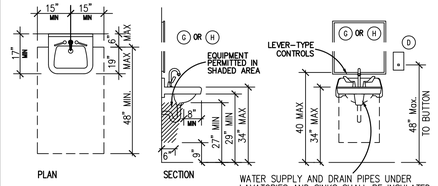

PLAN

SECTION

WATER SUPPLY AND DRAIN PIPES UNDER LAVATORIES AND SINKS SHALL BE INSULATED OR OTHERWISE CONFIGURED TO PROTECT AGAINST CONTACT. THERE SHALL BE NO SHARP OR ABRASIVE SURFACES UNDER LAVATORIES OR SINKS. (A.D.A. 606.5)

LAVATORY AND SINKS

SEE SECTION 606 OF THE TAS FOR ADDITIONAL REQUIREMENTS ON ACCESSIBLE LAVATORIES.

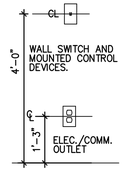

ELECTRICAL DEVICES

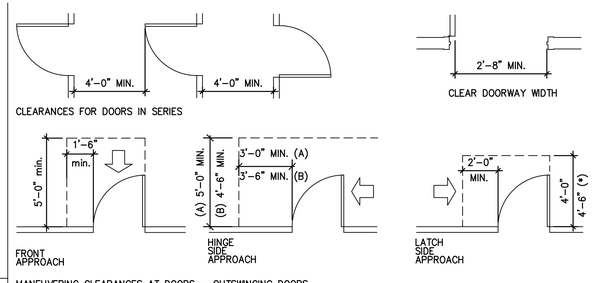

DOORS

SEE SECTION 404.2.4 OF THE TAS FOR ADDITIONAL REQUIREMENTS ON DOORS.

NOTE: ALL DOORS IN ALCOVES MUST COMPLY WITH THE CLEARANCES NOTED FOR FRONT APPROACHES.

(*) WITH CLOSER
(**) WITH LATCH & CLOSER

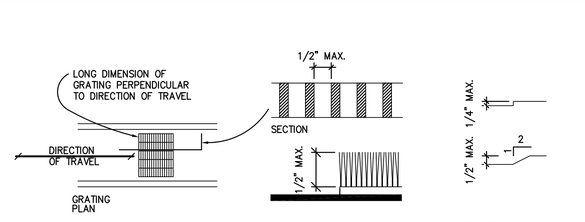

GROUND AND FLOOR SURFACES

SEE SECTION 302 OF THE TAS FOR ADDITIONAL REQUIREMENTS ON GROUND AND FLOOR SURFACES.

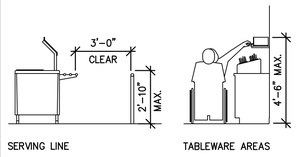

FOOD SERVICES LINES

SEE SECTIONS 227.4 AND 904.5 OF THE TAS FOR ADDITIONAL REQUIREMENTS ON FOOD SERVICE.

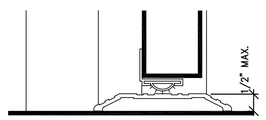

DOOR THRESHOLD DETAIL

SEE SECTION 404.2.5 OF THE TAS FOR ADDITIONAL REQUIREMENTS ON DOORS.

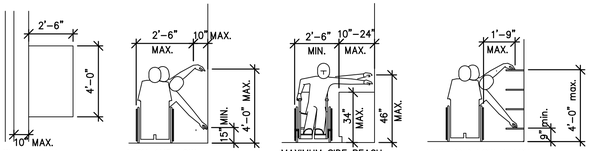

REACH RANGES

SEE SECTION 308 OF THE TAS

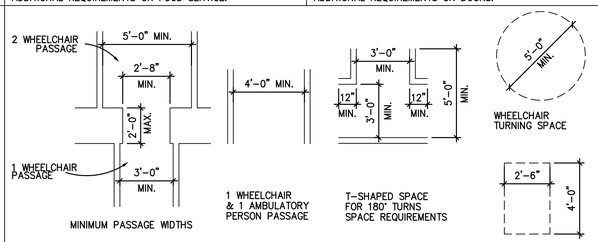

ACCESSIBLE ROUTE

SEE SECTION 206 OF THE TAS FOR ADDITIONAL REQUIREMENTS ON ACCESSIBLE ROUTES.

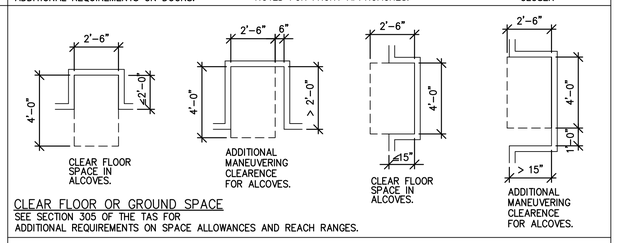

CLEAR FLOOR OR GROUND SPACE

SEE SECTION 305 OF THE TAS FOR ADDITIONAL REQUIREMENTS ON SPACE ALLOWANCES AND REACH RANGES.

Note: If mounted more than 27" a.f.f, the leading edge of the drinking fountain can protrude a maximum of 4" into walks, corridors, passageways, halls or aisles.

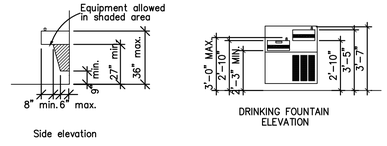

Drinking Fountains

See section 602 of the TAS for additional requirements on drinking fountains.

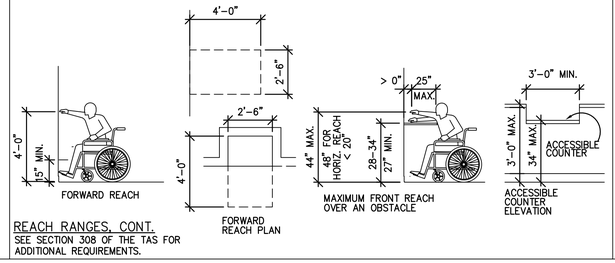

REACH RANGES, CONT.

SEE SECTION 308 OF THE TAS FOR ADDITIONAL REQUIREMENTS.

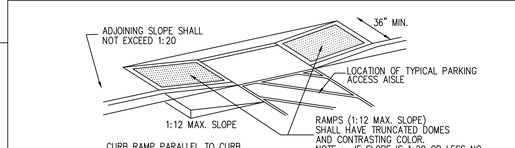

A. IF DIAGONAL CURB RAMPS HAVE RETURNED CURBS OR OTHER WELL-DEFINED EDGES, SUCH EDGES SHALL BE PARALLEL TO THE DIRECTION OF PEDESTRIAN FLOW. THE BOTTOM OF DIAGONAL CURB RAMPS SHALL HAVE 48" MINIMUM CLEAR SPACE. IF DIAGONAL CURB RAMPS ARE PROVIDED AT MARKED CROSSINGS, THE 48" CLEAR SPACE SHALL BE WITHIN THE MARKINGS. IF DIAGONAL CURB RAMPS HAVE FLARED SIDES, THEY SHALL ALSO HAVE AT LEAST A 24" LONG SEGMENT OF STRAIGHT CURB LOCATED ON EACH SIDE OF THE CURB RAMP AND WITHIN THE MARKED CROSSING.

4 Handi Cap Ramp Details
SCALE – NONE

SEE SECTION 705 OF THE TAS FOR ADDITIONAL REQUIREMENTS ON DETECTABLE WARNINGS AND TRUNCATED DOMES.

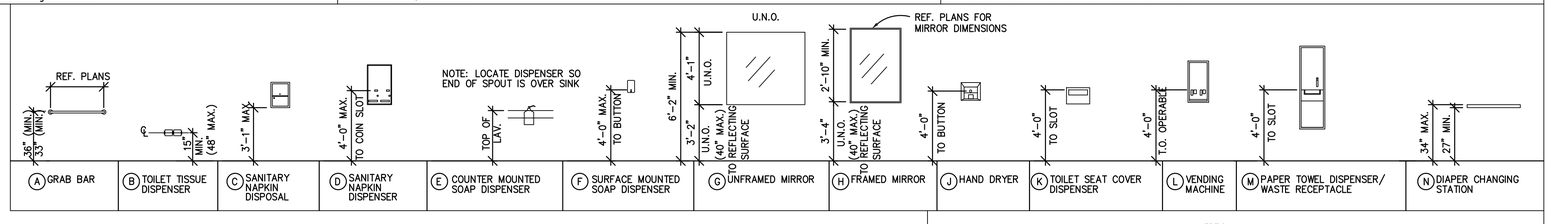

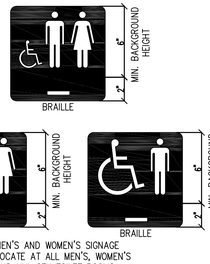

MEN'S AND WOMEN'S SIGNAGE LOCATE AT ALL MEN'S, WOMEN'S AND UNI-SEX TOILET ROOMS

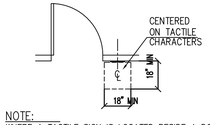

NOTE:
WHERE A TACTILE SIGN IS LOCATED BESIDE A DOOR, THE SIGN SHALL BE LOCATED ALONGSIDE THE DOOR ON THE LATCH SIDE. SIGNS CONTAINING TACTILE CHARACTERS SHALL BE LOCATED SO THAT A CLEAR FLOOR SPACE OF 18 INCHES MINIMUM BY 18 INCHES MINIMUM, CENTERED ON THE TACTILE CHARACTERS, IS PROVIDED BEYOND THE ARC OF THE DOOR SWING BETWEEN THE CLOSED POSITION AND 45 DEGREES OPEN POSITION.

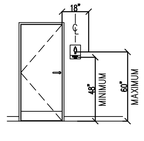

NOTE:
TACTILE CHARACTERS ON SIGNS SHALL BE LOCATED 48 INCHES MINIMUM ABOVE THE FINISHED FLOOR OR GROUND SURFACE, MEASURED FROM THE BASELINE OF THE LOWEST TACTILE CHARACTER AND 60 INCHES MAXIMUM ABOVE THE FINISHED FLOOR OR GROUND SURFACE, MEASURED FROM THE BASELINE OF THE THE HIGHEST TACTILE CHARACTER.

SIGNAGE

SEE SECTION 703 OF THE ADA FOR ADDITIONAL REQUIREMENTS ON SIGNS

FIXTURE MOUNTING DIAGRAMS

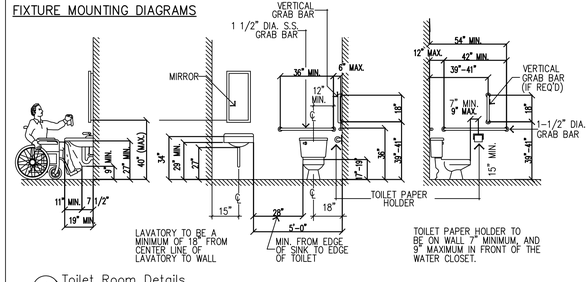

1 Toilet Room Details
SCALE – 1/4" = 1'-0"

GENERAL ACCESSIBILITY NOTES:

INFORMATION SHOWN ON THIS SHEET IS THE MINIMUM REQUIRED FOR ADA COMPLIANCE.

NOT ALL CONDITIONS SHOWN ON THIS SHEET MAY BE REQUIRED BY THIS PROJECT. COMPARE THE REQUIREMENTS OF THE ARCHITECTURAL DRAWINGS WITH THIS SHEET FOR RELEVANCE OF INFORMATION.

DIMENSIONS INDICATED ARE THE MINIMUM CLEAR DIMENSIONS REQUIRED BY THE TAS ACCESSIBILITY GUIDELINES. THE CONTRACTOR IS RESPONSIBLE FOR LAYOUT OF BUILDING ELEMENTS TO ASSURE THAT DIMENSIONS SHOWN ARE PROVIDED.

NOTIFY THE ARCHITECT IMMEDIATELY OF ANY DISCREPANCIES BETWEEN THE ARCHITECTURAL DRAWINGS AND THE INFORMATION GIVEN ON THIS SHEET.

DO NOT SCALE THESE DRAWINGS.

REFER, ALSO, TO FEDERAL PUBLICATION "AMERICANS WITH DISABILITIES ACT, TITLE III; PUBLIC ACCOMMODATIONS" (LATEST EDITION) AND PROJECT LOCAL GOVERNING REGULATIONS FOR COMPLETE PROJECT ACCESSIBILITY REQUIREMENTS.

SPECIAL ACCESSIBILITY REQUIREMENTS:

DOOR HARDWARE:

DOORS SHALL HAVE LEVER-OPERATED MECHANISMS, PUSH-TYPE MECHANISMS, OR U-SHAPED HANDLES.

HANDLES, PULLS, LATCHES, LOCKS, AND OTHER OPERATING DEVICES ON ACCESSIBLE DOORS SHALL HAVE A SHAPE THAT IS EASY TO GRASP WITH ONE HAND AND DOES NOT REQUIRE TIGHT GRASPING, TIGHT PINCHING, OR TWISTING OF THE WRIST TO OPERATE.

SLIDING DOORS, IF ANY, WHEN FULLY OPEN SHALL HAVE OPERATING HARDWARE EXPOSED AND USABLE FROM BOTH SIDES.

MOUNTING HEIGHT: HARDWARE REQUIRED FOR ACCESSIBLE DOOR PASSAGE SHALL BE MOUNTED NO HIGHER THAN 48" ABOVE FINISHED FLOOR.

CLOSER OPERATION: THE SWEEP PERIOD OF A CLOSER SHALL BE ADJUSTED SO THAT FROM AN OPEN POSITION OF 70 DEGREES, THE DOOR WILL TAKE AT LEAST 3 SECONDS TO MOVE TO A POINT 3" FROM THE LATCH, MEASURED TO THE LEADING EDGE OF THE DOOR.

THE MAXIMUM FORCE FOR PUSHING OR PULLING OPEN A DOOR SHALL BE AS FOLLOWS:
(A) EXTERIOR HINGED DOORS: NO REQUIREMENT.
(B) INTERIOR HINGED DOORS: 5 LBF
(C) SLIDING OR FOLDING DOORS: 5 LBF

EXCEPT THAT FIRE DOORS SHALL HAVE THE MINIMUM OPENING FORCE ALLOWABLE BY THE APPROPRIATE ADMINISTRATIVE AUTHORITY.
THESE FORCES DO NOT APPLY TO THE FORCE REQUIRED TO RETRACT LATCH BOLTS OR DISENGAGE OTHER DEVICES THAT MAY HOLD THE DOOR IN A CLOSED POSITION.

AUTOMATIC DOORS AND AUTOMATIC GATES SHALL COMPLY WITH 404.3. FULL POWERED, AUTOMATIC DOORS SHALL COMPLY WITH ANSI / BHMA A156.10 (INCORPORATED BY REFERENCE, SEE REFERENCED STANDARDS IN CHAPTER 1)

A156.19 (1997 OR 2002 EDITION (INCORPORATED BY REFERENCE, SEE REFERENCED STANDARDS IN CHAPTER 1)
SUCH DOORS SHALL NOT OPEN TO BACK CHECK FASTER THAN 3 SECONDS

IF USER-OPERATED CONTROLS ARE PROVIDED THEY SHALL COMPLY WITH TEXAS ACCESSIBILITY STANDARDS, SECTION 4.27.

CONTROLS AND OPERATING MECHANISMS:

HEIGHT: SWITCHES, THERMOSTATS, CONTROLS, DISPENSERS, RECEPTACLES, AND THE HIGHEST OPERABLE PART OF OTHER OPERABLE EQUIPMENT SHALL BE PLACED NO HIGHER THAN 48" ABOVE THE FLOOR AND WITHIN THE REACH RANGES REQUIRED
RECEPTACLES OF ELECTRICAL AND COMMUNICATIONS SYSTEM ON WALLS SHALL BE MOUNTED NO LESS THAN 15" ABOVE THE FLOOR.

EXCEPTION: THESE REQUIREMENTS DO NOT APPLY WHERE THE USE OF SPECIAL EQUIPMENT DICTATES OTHERWISE OR WHERE ELECTRICAL AND COMMUNICATIONS SYSTEMS RECEPTACLES ARE NOT NORMALLY INTENDED FOR USE BY BUILDING OCCUPANTS.

FLUSH CONTROLS SHALL BE HAND OPERATED OR AUTOMATIC. CONTROLS FOR FLUSH VALVES SHALL BE MOUNTED ON THE WIDE SIDE OF TOILET AREAS NO MORE THAN 44" ABOVE THE FLOOR.

OPERATION: CONTROLS AND OPERATING MECHANISMS SHALL BE OPERABLE WITH ONE HAND AND SHALL NOT REQUIRE TIGHT GRASPING, PINCHING, OR TWISTING OF THE WRIST. THE FORCE REQUIRED TO ACTIVATE CONTROLS SHALL BE NO GREATER THAN 5 LBF.

GRAB BARS, AND TUB AND SHOWER SEATS:

THE OUTSIDE DIAMETER OR WIDTH OF THE GRIPPING SURFACES OF A HANDRAIL OR GRAB BAR SHALL BE 1-1/4" TO 1-1/2", OR THE SHAPE SHALL PROVIDE AN EQUIVALENT GRIPPING SURFACE.

IF HANDRAILS OR GRAB BARS ARE MOUNTED ADJACENT TO A WALL, THE SPACE BETWEEN THE WALL AND THE GRAB BAR SHALL BE 1-1/2".

BENDING STRESS IN A GRAB BAR OR SEAT INDUCED BY THE MAXIMUM BENDING MOMENT FROM THE APPLICATION OF 250 LBF SHALL BE LESS THAN THE ALLOWABLE STRESS FOR THE MATERIAL OF THE GRAB BAR OR SEAT.

SHEAR STRESS INDUCED IN A GRAB BAR OR SEAT BY THE APPLICATION OF 250 LBF SHALL BE LESS THAN THE ALLOWABLE SHEAR STRESS FOR THE MATERIAL OF THE GRAB BAR OR SEAT.

SHEAR FORCE INDUCED IN A FASTENER OR MOUNTING DEVICE FROM THE APPLICATION OF 250 LBF SHALL BE LESS THAN THE ALLOWABLE LATERAL LOAD OF EITHER THE FASTENER OR MOUNTING DEVICE OR THE SUPPORTING STRUCTURE, WHICHEVER IS THE SMALLER ALLOWABLE LOAD.

TENSILE FORCE INDUCED IN A FASTENER BY A DIRECT TENSION FORCE OF 250 LBF PLUS THE MAXIMUM MOMENT FROM THE APPLICATION OF 250 LBF SHALL BE LESS THAN THE ALLOWABLE WITHDRAWAL LOAD BETWEEN THE FASTENER AND THE SUPPORTING STRUCTURE.

ROTATION OF GRAB BARS WITHIN THEIR FITTINGS IS NOT ACCEPTABLE.

SHARP OR ABRASIVE ELEMENTS ARE NOT ACCEPTABLE FOR A HANDRAIL OR GRAB BAR OR ANY WALL OR OTHER SURFACE ADJACENT TO IT. EDGES SHALL HAVE A MINIMUM RADIUS OF 1/8".

SIGNAGE:

THE WIDTH-TO-HEIGHT RATIO OF LETTERS AND NUMBERS ON SIGNS SHALL HAVE A BETWEEN 3:5 AND 1:1 AND A STROKE-WIDTH-TO-HEIGHT RATIO BETWEEN 1:5 AND 1:10 USING AN UPPER-CASE "X" FOR MEASUREMENT. LOWER CASE LETTERS ARE PERMITTED.

OVERHEAD SIGN CHARACTERS AND NUMBERS SHALL BE SIZED ACCORDING TO THE VIEWING DISTANCE FROM WHICH THEY ARE TO BE READ. FOR SUSPENDED OR PROJECTED OVERHEAD SIGNS, THE MINIMUM CHARACTER HEIGHT IS 3".

BRAILLED CHARACTERS AND PICTORIAL SYMBOL SIGNS (PICTOGRAMS) SHALL BE RAISED 1/32", UPPER CASE, SANS SERIF OR SIMPLE SERIF TYPE AND SHALL BE ACCOMPANIED WITH GRADE 2 BRAILLE. RAISED CHARACTERS SHALL BE AT LEAST 5/8" HIGH, BUT NO HIGHER THAN 2". PICTOGRAMS SHALL BE ACCOMPANIED BY THE EQUIVALENT VERBAL DESCRIPTION PLACED DIRECTLY BELOW THE PICTOGRAM. THE BORDER DIMENSION OF THE PICTOGRAM SHALL BE 6" MINIMUM IN HEIGHT.

FINISH: THE CHARACTERS AND BACKGROUND OF SIGNS SHALL BE EGGSHELL, MATTE, OR OTHER NON-GLARE FINISH. CHARACTERS AND SYMBOLS SHALL CONTRAST WITH THEIR BACKGROUND.

PERMANENT IDENTIFICATION SIGNS PROVIDED FOR ROOMS AND SPACES, SIGNS SHALL BE INSTALLED ON THE WALL ADJACENT TO THE LATCH SIDE OF THE DOOR. WHERE THERE IS NO WALL SPACE TO THE LATCH SIDE OF THE DOOR, INCLUDING AT DOUBLE LEAF DOORS, SIGNS SHALL BE PLACED ON THE NEAREST ADJACENT WALL. MOUNTING HEIGHT SHALL BE 60" ABOVE THE FINISH FLOOR TO THE CENTERLINE OF THE SIGN.

MOUNTING LOCATION FOR SUCH SIGNAGE SHALL BE SO THAT A PERSON MAY APPROACH WITHIN 3" OF SIGNAGE WITHOUT ENCOUNTERING PROTRUDING OBJECTS OR STANDING WITHIN THE SWING OF A DOOR.

CONTRACTOR SHALL FIELD VERIFY ALL EXISTING CONDITIONS AND DIMENSIONS PRIOR TO BID AND REPORT ANY DISCREPANCIES BACK TO OWNER. G.C. SHALL COORDINATE ALL SUB CONTRACTORS AND ENSURE A COMPLETE FULLY CODE COMPLIANT AND PROFESSIONALLY FINISHED TENANT SPACE.

ISSUED / REVISIONS:

ENGINEERING AND DESIGN PLLC
PO Box 213 (Nelling)
4236 HWY 36S
Annville, KY 40402
Phone (606)-364-2886
Fax (606)-364-5100
E-Mail: eric@emrengineers.com
Web Address: emrengineers.com
FIRM 23179

COLORADO REGISTERED PROFESSIONAL ENGINEER 36557 9.13.24 PROFESSIONAL ENGINEER

BIDDING QUESTIONS CONTACT 920-757-1486

PERSPIRE SAUNA STUDIO

2450 SOUTH UNIVERSITY BLVD
SUITE
DENVER, CO 80210

CHECKED BY:	Staff
DRAWN BY:	Staff
DATE:	SEPTEMBER 12, 2023
SCALE:	PER PLAN
PROJECT No.:	PSS 2401

SHEET TITLE

ACCESSIBLE DETAILS

SHEET No.

1.05

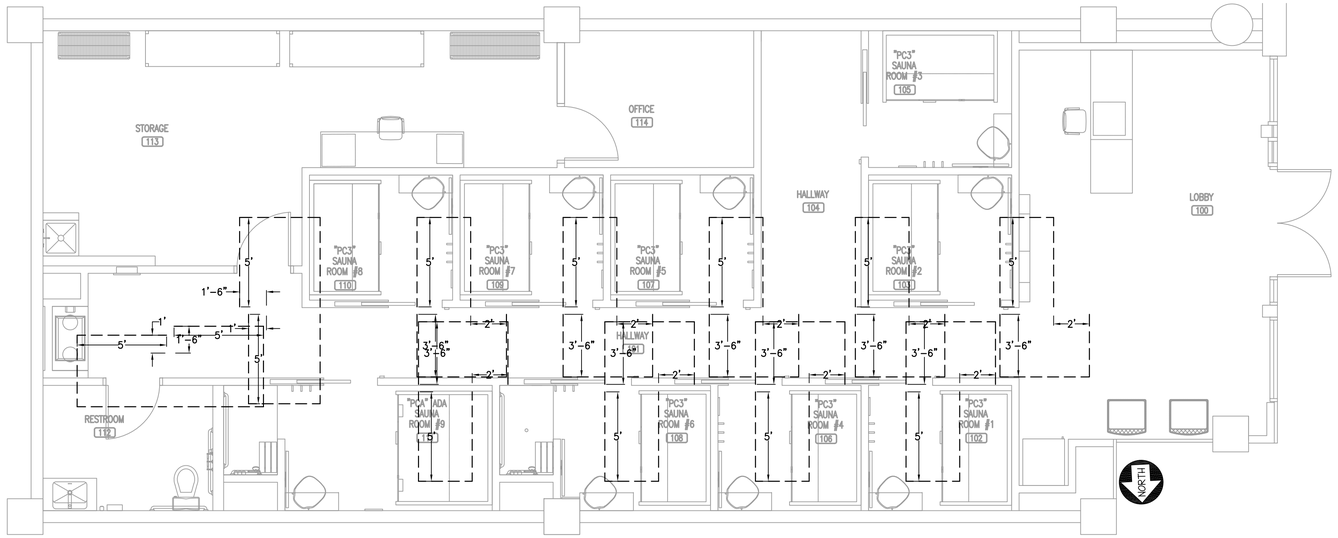

DOOR APPROACH CLEARANCE PLAN

SCALE: 1/4"=1'-0"

G.C. SHALL BE RESPONSIBLE FOR ACQUIRING AND INSTALLING NEW TACTILE EXIT SIGNS. A TACTILE SIGN STATING EXIT AND COMPLYING WITH CHAPTER 11 OR BUILDING CODE SHALL BE PROVIDED ADJACENT TO EACH DOOR TO AN AREA OF REFUGE, AN EXTERIOR AREA FOR ASSISTED RESCUE, AN EXIT STAIRWAY, AN EXIT RAMP, AN EXIT PASSAGEWAY AND THE EXIT DISCHARGE. SEE CHAPTER 7 OF ACCESSIBILITY CODE.

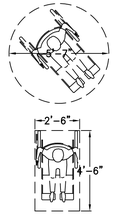

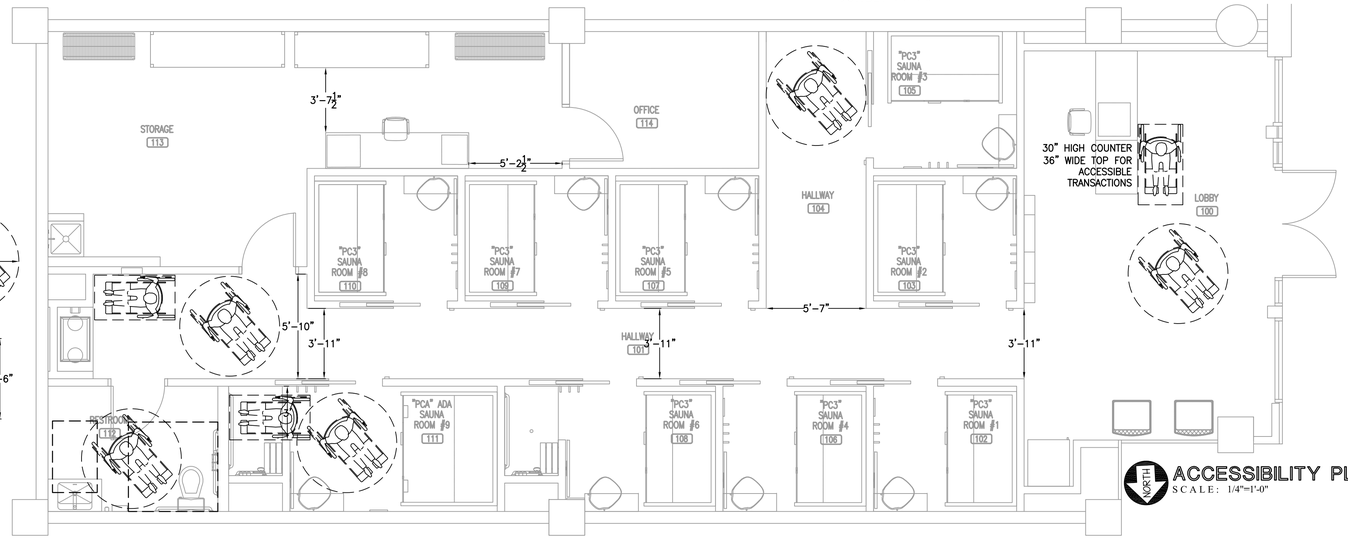

ACCESSIBILITY PLAN

SCALE: 1/4"=1'-0"

CONTRACTOR SHALL FIELD VERIFY ALL EXISTING CONDITIONS AND DIMENSIONS PRIOR TO BID AND REPORT ANY DISCREPANCIES BACK TO OWNER. G.C. SHALL COORDINATE ALL SUB CONTRACTORS AND ENSURE A COMPLETE FULLY CODE COMPLIANT AND PROFESSIONALLY FINISHED TENANT SPACE.

ISSUED / REVISIONS:

ENGINEERING AND DESIGN PLLC
PO Box 213 (Kelling)
4236 HWY 3650
Annville, KY 40402
FIRM 23179
Phone (606)-364-2886
Fax (606)-364-5100
E-Mail: eric@emrengineers.com
Web Address: emrengineers.com

COLORADO REGISTERED
ERIC ENGEL
36557
PROFESSIONAL ENGINEER
9.13.23

BIDDING QUESTIONS CONTACT 920-757-1486

PERSPIRE SAUNA STUDIO

2450 SOUTH UNIVERSITY BLVD
SUITE 101
DENVER, CO 80210

CHECKED BY:	Staff
DRAWN BY:	Staff
DATE:	SEPTEMBER 12, 2023
SCALE:	PER PLAN
PROJECT No.:	PSS 2401

SHEET TITLE

ACCESSIBLE PLAN

SHEET No.

1.06

LIGHTING
- USE PLANS FIXTURE SCHEDULE
- ALL FIXTURES, SENSORS, AND DIMMERS ARE SUPPLIED AND INSTALLED BY GC/EC

SPEAKERS – 5 TOTAL WITHIN SUITE
- PROVIDED BY OWNER & INSTALLED BY OWNER VENDOR SPEAKER WIRE CONNECTS TO OWNER SUPPLIED AMPLIFIER LOCATED AT THE PHONE BOARD. TENANT TO CONFIRM PLACEMENT OF THE AMPLIFIER IN THE FIELD.
- ALL GRILLES AND DIFFUSERS TO BE FACTORY WHITE.

CEILING COVERING

1. ARMSTRONG, DUNE 1775, TEGULAR 24"X24"X5/8" MOUNTED AT 11'-0". SUPRAFINE XL 9/16" GRID, FACTORY WHITE
2. ARMSTRONG, DUNE 1775, TEGULAR 24"X24"X5/8" MOUNTED AT 8'-0". SUPRAFINE XL 9/16" GRID, FACTORY WHITE
3. GYPSUM BOARD CEILING – PT3 MOUNTED AT 11'-0"
4. GYPSUM BOARD CEILING – PT1 MOUNTED AT 11'-0"
5. GYPSUM BOARD CEILING – PT1 MOUNTED AT 8'-0"
6. GYPSUM BOARD CEILING – PT1 MOUNTED AT 7'-3"
7. ARMSTRONG, DUNE 1775, TEGULAR 24"X24"X5/8" MOUNTED AT 9'-0". SUPRAFINE XL 9/16" GRID, FACTORY WHITE

ALL FINISHES ARE NOT NECESSARILY IN USE.
IF CEILING HEIGHT, DUE TO SITE CONDITIONS, IS NOT ATTAINABLE, GC TO DISCUSS FINISHED HEIGHT WITH CONSTRUCTION MANAGER. REFER TO FINISH SCHEDULE FOR CEILING FINISH SPECIFICATIONS.

A	6" RECESSED DOWN LIGHT (DAMP LOCATION FOR SHOWERS ONLY) +11'-0" AFF IN GRID
B	4" RECESSED WALLWASHER +11'-0" AFF
C	24" DRUM LIGHT +8'-11" AFF. INSTALL WITH (1) 12" ROD SUPPLIED BY MANUFACTURER.
D	14" DRUM LIGHT +7'-3" AFF
E	WALL MIRROR (BACKLIT) +3'-2" AFF TO BOTTOM OF MIRROR
EM	EMERGENCY LIGHT WITH 90 MINUTE BATTERY BACKUP MOUNT BOTTOM OF FIXTURE 8'-0" AFF
RH	EMERGENCY LIGHT REMOTE EXTERIOR HEAD
EX	EXIT SIGN
EX	DIRECTIONAL EXIT SIGN
EX/EM	EMERGENCY LIGHT WITH 90 MINUTE BATTERY BACKUP AND EXIT SIGN. MOUNT 12" ABOVE DOOR
SP	CEILING MOUNTED SPEAKER, TRIM TO MATCH SURFACE PROVIDED BY OWNER, INSTALLED BY G.C.
	FULLY CONCEALLED SPRINKLER HEAD
	24"X24" SUPPLY AIR DIFFUSER
	12"X12" SUPPLY AIR DIFFUSER
	EXHAUST FAN
	24"X24" RETURN AIR GRILL
	SUPPLY AIR SLOT DIFFUSER

REFLECTED CEILING LEGEND

NOT ALL FIXTURES ARE NECESSARILY IN USE. LIGHT SWITCHES/CONTROLS TO BE MOUNTED AT 48" A.F.F. TO TOP OF CONTROL.
LIGHT FIXTURES, OCCUPANCY SENSORS AND FLUORESCENT DIMMER SUPPLIED BY GC/EC.
WALL MIRROR BY FCD, INSTALLED BY GC/EC

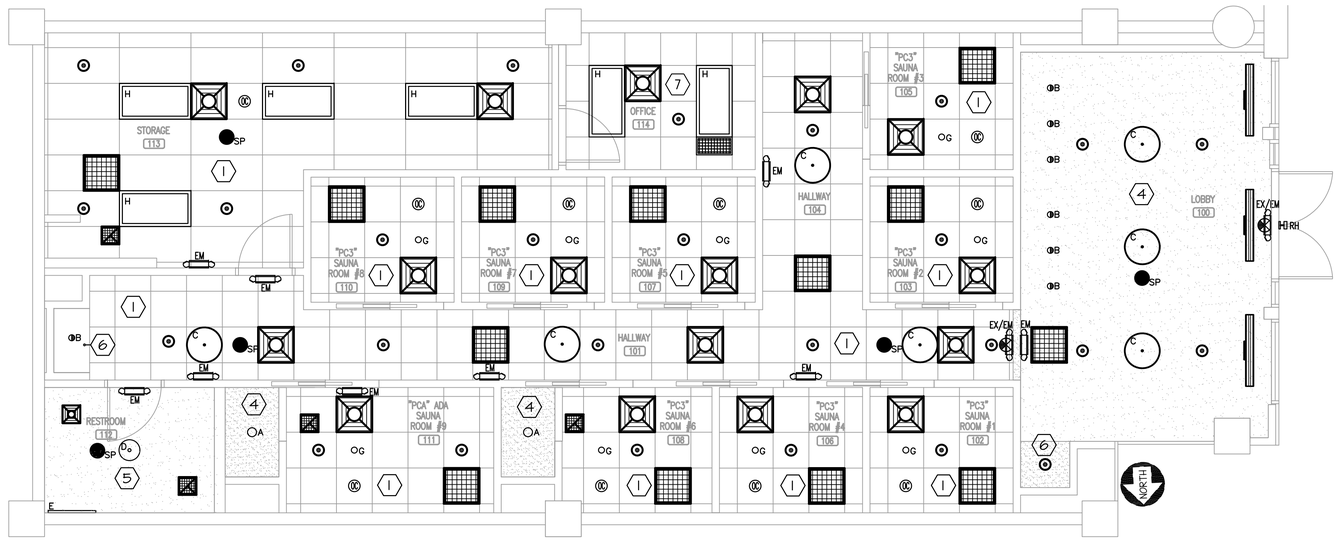

REFLECTED CEILING PLAN
SCALE: 1/4"=1'-0"

CONTRACTOR SHALL FIELD VERIFY ALL EXISTING CONDITIONS AND DIMENSIONS PRIOR TO BID AND REPORT ANY DISCREPANCIES BACK TO OWNER. G.C. SHALL COORDINATE ALL SUB CONTRACTORS AND ENSURE A COMPLETE FULLY CODE COMPLIANT AND PROFESSIONALLY FINISHED TENANT SPACE.

ISSUED / REVISIONS:

ENGINEERING AND DESIGN PLLC
PO Box 213 (Mailing)
4236 HWY 3630
Annville, KY 40402
FIRM 23179
Phone (606)-364-2886
Fax (606)-364-5100
E-Mail: eric@emrengineers.com
Web Address: emrengineers.com

COLORADO REGISTERED ENGINEER 36587 9.13.2023 PROFESSIONAL ENGINEER

BIDDING QUESTIONS CONTACT 920-757-1486

PERSPIRE SAUNA STUDIO
2450 SOUTH UNIVERSITY BLVD
SUITE D1
DENVER, CO 80210

CHECKED BY:	Staff
DRAWN BY:	Staff
DATE:	SEPTEMBER 12, 2023
SCALE:	PER PLAN
PROJECT No.:	PSS 2401

SHEET TITLE
REFLECTED CEILING PLAN

SHEET No.
1.07

SEISMIC APPLICATION REQUIREMENTS

NOTE: INTERIOR PARTITIONS CANNOT BE CONNECTED TO CEILING GRID.

BASIC CONNECTIONS PERIMETER AND LATERAL SPLAY BRACING	IBC CATAGORY C
MINIMUM INTERSECTION STRENGTH LIMITS ΦMT / CT (3)	60 LBS
VERTICAL HANGER WIRE 12 GAUGE @ 4'-0" O.C.	REQUIRED
CONNECTION DEVICE FROM VERTICAL WIRE TO THE SURFACEABOVE MUST STAIN MIN 100lbs	NOT REQUIRED
MAIN-TEE CLASSIFICATIONS	INTERMEDIATE OR HEAVY DUTY
1 IN 6 MAX PLUMB OF VERTICAL HANGER WIRES	REQUIRED
PERIMETER VERTICAL HANGER WIRES NOT MORE THAN 8" FROM WALL	NOT REQUIRED UNLESS<7/8"
GRID END/WALL CLEARANCE	MIN 3/8"
PERIMETER CLOSURE (MOLDING) WIDTH	MIN 7/8" OR USE PER WIRES
GRID CONNECTION TO PERIMETER ATTACHED ON TWO ADJACENT WALLS	NOT PERMITTED
PERIMETER TEE ENDS TIED TOGETHER AT PERIMETERS	REQUIRED
HORIZONTAL RESTRAINT (SPLAY WIRES OR RIGID BRACING) WITHIN 2" OF INTERSECTION AND SPLAYED 90° APART AT 45°.	NOT REQUIRED

BASIC CONNECTIONS PERIMETER AND LATERAL SPLAY BRACING	IBC CATAGORY C
PARTITION ATTACHMENT	NOT ALLOWED
SEISMIC SEPARATION JOINT	NOT REQUIRED
RIGID BRACING FOR CEILING PLANE ELEVATION CHANGES	NOT REQUIRED

LIGHT FIXTURE ATTACHMENT	IBC CATAGORY D, E, F
LIGHT FIXTURE (ALLTYPES) MECHANICALLY ATTACHED REQUIRED TO GRID PER NEC 410-16 (TWO PER FIXTURE UNLESS INDEPENDENTLY SUPPORTED)	REQUIRED
-SURFACE-MOUNTED FIXTURES ATTACHED TO GRID	NOT REQUIRED
-PENDANT-HUNG FIXTURES DIRECTLY SUPPORTED FROM STRUCTURE WITH 9-GAUGE WIRE (OR APPROVED ALTERNATIVE).	REQUIRED
-RIGID LAY-IN CAN LIGHT FIXTURES	
<10lbs - ONE WIRE TO STRUCTURE (MAY BE SLACK)	REQUIRED
10 TO 56 lbs - TWO WIRES FROM HOUSING TO STRUCTURE (MAY BE SLACK)	REQUIRED
> 57 lbs - SUPPORTED DIRECTLY TO STRUCTURE BY APPROVED HANGERS	REQUIRED

SERVICE APPLICATION	IBC CATAGORY D, E, F
AIR TERMINALS	
< 20lbs - POSITIVELY ATTACHED TO GRID	REQUIRED
20 TO 56 lbs - POSITIVELY ATTACHED TO GRID AND TWO 12-GAUGE WIRES TO STRUCTURE (MAY BE SLACK)	REQUIRED
>56 lbs - DIRECTLY SUPPORTED TO STRUCTURE	REQUIRED
CABLE TRAYS AND ELECTRICAL CONDUIT INDEPENDENTLY SUPPORTED AND BRACED	REQUIRED
SPRINKLER HEADS AND OTHER PENETRATION CLEARANCES	3/8" ALL SIDES

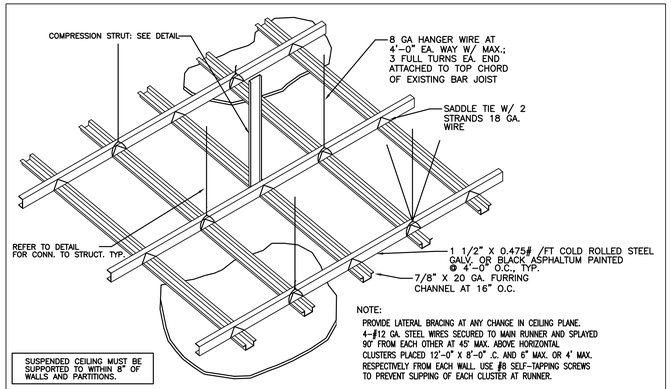

1 DETAIL- SUSPENDED GYP. BD. CEILING N.T.S

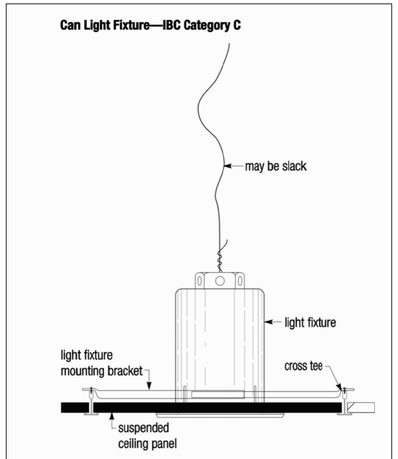

2 CAN LIGHT INSTALLATION N.T.S

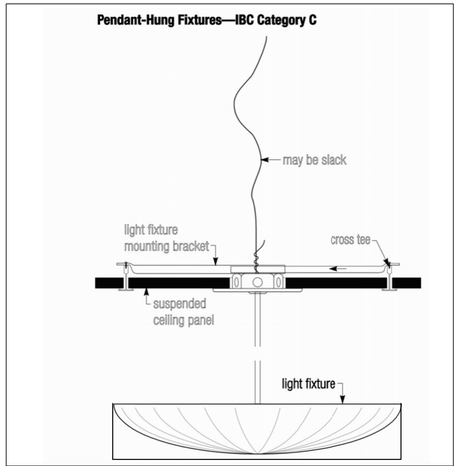

3 PENDANT LIGHT INSTALLATION N.T.S

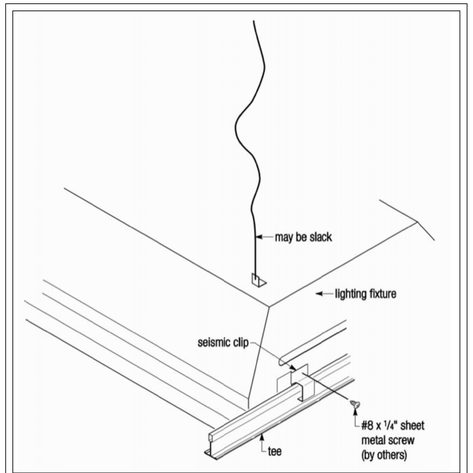

4 TROFFER INSTALLATION N.T.S

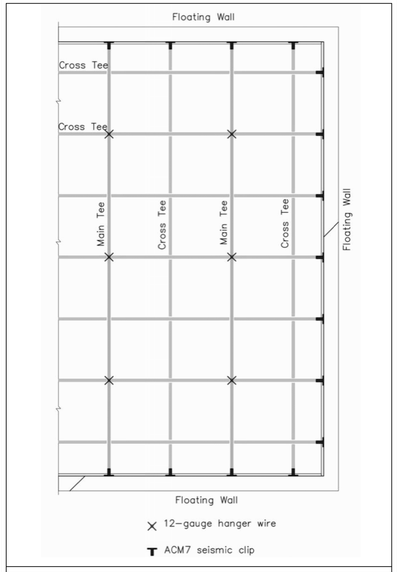

5 SEISMIC CLIP LAYOUT N.T.S

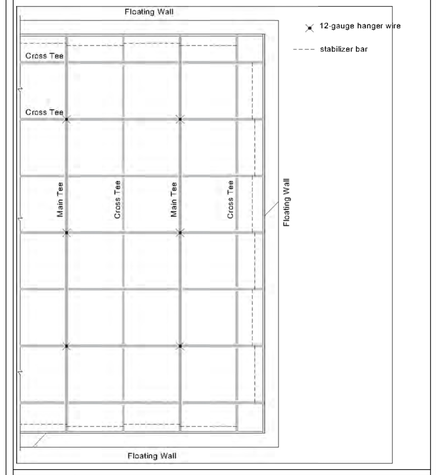

6 STANDARD CEILING LAYOUT N.T.S

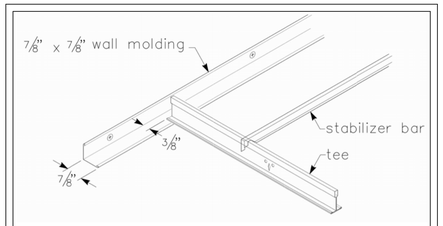

7 STABILIZER BAR N.T.S

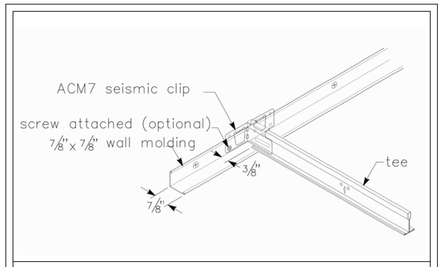

8 ACM7 CLIP N.T.S

CONTRACTOR SHALL FIELD VERIFY ALL EXISTING CONDITIONS AND DIMENSIONS PRIOR TO BID AND REPORT ANY DISCREPANCIES BACK TO OWNER. G.C. SHALL COORDINATE ALL SUB CONTRACTORS AND ENSURE A COMPLETE FULLY CODE COMPLIANT AND PROFESSIONALLY FINISHED TENANT SPACE.

ISSUED / REVISIONS:

ENGINEERING AND DESIGN PLLC
PO Box 213 (Nelling)
4236 HWY 36S0
Annville, KY 40402
FIRM 23179
Phone (606)-364-2886
Fax (606)-364-5100
E-Mail: eric@emrengineers.com
Web Address: emrengineers.com

COLORADO REGISTERED PROFESSIONAL ENGINEER 36557 9.13.23 PROFESSIONAL ENGINEER

BIDDING QUESTIONS CONTACT 920-757-1486

PERSPIRE SAUNA STUDIO

2450 SOUTH UNIVERSITY BLVD
SUITE D
DENVER, CO 80210

CHECKED BY:	Staff
DRAWN BY:	Staff
DATE:	SEPTEMBER 12, 2023
SCALE:	PER PLAN
PROJECT No.:	PSS 2401

SHEET TITLE

CEILING DETAILS

SHEET No.

1.08

NOTES
1. GC TO INCLUDE COLOR MATCH CAULK FOR ALL SPLASHES AND CABINETRY DURING FINAL PAINTING.
2. ALL FLOORING AND GROUT SHALL BE SEALED WATER TIGHT PER GOOD INDUSTRY STANDARDS.

FINISH REQUIREMENTS

WALL FLOOR AND CEILING SHALL NOT EXCEED FLAME SPREAD CLASSIFICATIONS IN TABLE 803.5
ALL APPLIED FINISHES SHALL MEET OR EXCEED THE FLAME SPREAD AND DEVELOPED SMOKE REQUIREMENTS AS SET FORTH IN THE BUILDING CODE.
CLASS A : FLAME SPREAD OF 0-25; SMOKE DEVELOPED 0-450
CLASS B : FLAME SPREAD OF 26-75; SMOKE DEVELOPED 0-450
CLASS C : FLAME SPREAD OF 76-200; SMOKE DEVELOPED 0-450

TABLE 803.5 SPRINKLED

OCCUPANCY	VERTICLE EXITS AND EXIT PASSAGEWAYS	EXIT ACCESS CORRIDORS AND OTHER EXITWAYS	ROOMS AND ENCLOSED SPACES
B	A	B	C

1 COAT OF TINTED PRIMER AND A MINIMUM OF TWO COATS OF PAINT SHALL BE APPLIED TO LEVEL FOUR FINISHED DRYWALL SURFACES IN A PROFESSIONAL MANNER SUCH AS TO PROVIDE A SMOOTH WASHABLE FINISHED SURFACE.

FINISH TRIM CARPENTER TO INSTALL RED CEDAR BOARDS IN RECESSED WALL CAVITIES. (NOTE: RECESS IS CREATED BY THICKNESS OF 5/8" DRYWALL)

RED CEDAR BOARD TO BE FLUSH TO FINISHED GYP BOARD WHEN INSTALLED.

AT AREAS THAT ARE TIGHT TO CEILING OR AT ADJACENT WALLS, TRANSITION FROM SIDING TO WALL OR CEILING SHOULD BE FIT TO CREATE AN EVEN FINISHED APPEARANCE. TOP RED CEDAR BOARD MAY BE RIPPED FOR PROPER FITMANT.

DRYWALL TO BE CAPPED WITH U-CHANNEL TO CREATE A CLEAN STRAIGHT CLEAN EDGE TRANSITION FROM THE DRYWALL TO THE CEDAR BOARDS. U-CHANNEL MUST NOT BE VISIBLE. FLOAT MUD TO HIDE U-CHANNEL TRANSITION, PAINT TO MATCH ADJACENT WALL, INCLUDING INSIDE EDGE OF U-CHANNEL IN THE RECESS.

EDGE CUTS TO BE STRAIGHT AND STACKING FOR AN EVEN FINISHED APPEARANCE.

GC TO LEAVE ⅛" GAP BETWEEN CEDAR BOARDS AND AT TRANSITION TO GYP BOARD.

OWNER TO SUPPLY CEDAR BOARD MATERIAL IN 8' AND 10' LINEAR LENGTHS TO BE CUT AND FIT ONSITE BY GC AS NEEDED

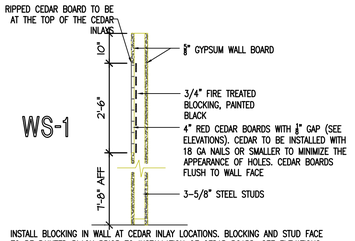

INSTALL BLOCKING IN WALL AT CEDAR INLAY LOCATIONS. BLOCKING AND STUD FACE TO BE PAINTED BLACK PRIOR TO INSTALLATION OF CEDAR BOARD. SEE ELEVATIONS FOR ADDITION INFORMATION AND CONFIRMATION OF LOCATIONS TO BE INSTALLED. SEE ADJACENT NOTES.

1 / 1.03 **TYPICAL RED CEDAR PANELED WALL**

PERSPIRE – FINISH SCHEDULE

ITEM NUMBER	DESCRIPTION	MANUFACTURER	SERIES PRODUCT NUMBER	COLOR	SUPPLIED BY	INSTALLED BY	NOTES
ACT1	ACOUSTIC CEILING TILE	ARMSTRONG	DUNE 1775 – TEGULAR 24"X24"X5/8"	SUPRAFINE XL 9/16" GRID – FACTORY WHITE	GC	GC	
CF1	POLISHED CONCRETE			SATIN FINISH	GC	GC	GC TO FILL HOLES/CRACKS AND CONCRETE JOINTS, REMOVE STAINING AND GRIND TO SMOOTH, LEVEL B FINISH (AGGREGATE NOT NEEDED) PRIOR TO POLISHING
FRP1	FIBERGLASS REINFORCED PLASTIC	MARLITE	PEBBLED SURFACE	P100 WHITE / WHITE	GC	GC	MOP SINK BACKING
GT1	GROUT	TRUECOLOR OR QUARTZLOCK2	PREMIXED URETHANE GROUT	BRIGHT WHITE	GC	GC	HALLWAY ACCENT WALL
GT2	GROUT	CUSTOM BUILDING PRODUCTS	POLYBLEND #165 NON-SANDED	DELOREAN GRAY	GC	GC	SHOWER FLOORS – THICKNESS 3/16"
GT3	GROUT	CUSTOM BUILDING PRODUCTS	POLYBLEND #60 NON-SANDED	CHARCOAL	GC	GC	SHOWER WALLS – THICKNESS 1/16", BATHROOM WALLS – BATHROOM WALLS – THICKNESS 1/16"
PT1	PAINT	DUNN EDWARDS	GC TO USE SHERWIN WILLIAMS PROMAR200 COLOR MATCH	SWISS COFFEE – EGGSHELL	GC	GC	THROUGHOUT, RESTROOMS
PT2	PAINT	DUNN EDWARDS	GC TO USE SHERWIN WILLIAMS PROMAR200 COLOR MATCH	CASTLEROCK – SEMI-GLOSS	GC	GC	DOORS
PT3	PAINT	DUNN EDWARDS	GC TO USE SHERWIN WILLIAMS PROMAR200 COLOR MATCH	SWISS COFFEE – SEMI-GLOSS	GC	GC	SHOWER CEILING & BASEBOARDS, DOOR TRIMS & JAMBS
T1	PORCELAIN TILE	TRENDY SURFACES	TS667216 12" X 24"	METALLIC BLACK	GC	GC	SHOWER WALLS AND RESTROOM WALLS LAY IN STAGGERED PATTERN CONTACT: LISA LE; LISA@TRENDYSURFACEINC.COM (714-284-0118)
T2	GLAZED PORCELAIN FLOOR TILE	DALTILE	SLATE ATTACHED 12" X 24"	META DARK GRAY SA07	GC	GC	SHOWER FLOORS (TILE TO BE PROPERLY ANGLED TO THE SHOWER DRAIN LOCATION) LAY IN STACKED PATTERN
T6	PENNYROUND MOSAIC TILE	INDOTEAK DESIGN	1ANTNATRMW	NATURAL TEAK, RESIN FINISH	GC	GC	HALLWAY ACCENTW ALL, GC TO PRESEAL TILES WITH BONA NOVIA FLOOR FINISH 1 DAY PRIOR TO GROUTING CONTACT: KIM GRANNIS 858.271.9801, KIM@INDOTEAKDESIGN.COM
T7	TILE CAP	SCHLUTER	RONDEC-DB	AE SATIN ANONDIZED ALUMINUM	GC	GC	SHOWER WALLS RUN VERTICALLY AT WALL TILE TRANSITION ALONG ENTRANCES AND AT TILED OUTSIDE CORNER
WB1	WOOD BOARD (1" X 6" MDF)	GC TO SOURCE LOCALLY	GC TO SOURCE LOCALLY	GC TO SOURCE LOCALLY	GC	GC	PAINTED PT3 THROUGHOUT
WB2	WOODBOARD (1" X 6" POPLAR OR EQUAL)	GC TO SOURCE LOCALLY	GC TO SOURCE LOCALLY	GC TO SOURCE LOCALLY	GC	GC	PAINTED PT3, RESTROOMS AND SHOWER SAUNA ROOMS
WP1	WALLPAPER	COLOR AND DESIGN	COLOURWAYS III	CD-CRW-330	GC	GC	INSTALL FLOOR TO CEILING
WS1	WOOD SIDING	FCD	1X4 NOMINAL WESTERN RED CEDAR	GRADE A RAW WOOD	FCD	GC	SEE ELEVATIONS – RECESSED INTO DRYWALL 1/8" GAP BETWEEN EACH PIECE OF SIDING

*NOTE: NOT ALL FINISHES ARE NECESSARILY IN USE.
*NOTE: OWNER TO INSTALL SAUNAS, VARNISH SAUNAS, AND INSTALL SAUNA SIGNAGE.
*NOTE: GC TO PAINT ALL RECESSED FIRE TREATED BOARDS AND AND EXPOSED STUD FACE WITH BLACK PAINT IN AN EGGSHELL FINISH PRIOR TO APPLYING THE CEDAR SIDING.
*NOTE: T6 REQUIREMENT – GC TO PRE-SEAL TILES WITH BONA NOVIA FLOOR FINISH 1 DAY PRIOR TO GROUTING TEAK TILES. GC MUST ENSURE THE GROUT IS FULLY CLEANED OUT OF THE MOSAIC PENNY ROUND TEAK TILE AND SHOULD ENSURE ADEQUATE TIME AND COST TO THE PROJECT FOR TILES TO BE FULLY CLEANED OF ANY GROUT OR HAZING AT TIME OF APPLICATION. THIS IS A PROGRAM REQUIREMENT. A SOFT BRISTLE BRUSH SHOULD BE USED TO REMOVE THE EXCESS GROUT AT TIME OF APPLICATION, PRIOR TO DRYING. ONCE HARDENED, GROUT ON TILES WILL NOT BE REMOVABLE AND WILL CREATE AN UNFAVORABLE FINISH.
*NOTE: GC TO SUPPLY MINWAX GOLDEN OAK STAIN AND CLEAR VARNISH FOR ANY CEDAR TOUCHUPS REQUIRED UPON INSTALLATION AND TO RESEAL ANY CUT ENDS.

WALL SURFACE TEXTURE

THE REQUIRED WALL TEXTURE FOR SUCCESSFUL GRAPHIC APPLICATION AND ADHESION IS SMOOTH, PROPERLY PRIMED, PAINTED, AND CURED WALL BOARD THAT HAS LITTLE OR NO SURFACE VARIATION (LEVEL 4 FINISH). CERTAIN TYPES OF IMPERFECTIONS IN THE WALL WILL BE SEEN AFTER THE WALLPAPER IS APPLIED. OUR INSTALLATION CREWS CAN NOT BE GIVEN THE AUTHORITY TO PUT A HOLD ON A PROJECT OR DETERMINE IF THE WALL IS A LEVEL 4 FINISH. CONTRACTOR/FRANCHISEE/DECISION MAKER AGREES THAT THE WALL WILL BE PREPARED TO SPECIFICATIONS WHEN OUR TEAMS ARE SCHEDULED TO ARRIVE.

5 LEVELS OF DRYWALL FINISHES
LEVEL 0: LEVEL 0 IMPLIES THAT NO FINISH OF ANY TYPE HAS BEEN DONE. THE DRYWALL IS ONLY FASTENED TO THE WALLS OR CEILING.
LEVEL 1: EMBED YOUR DRYWALL JOINT TAPE IN JOINT COMPOUND.
LEVEL 2: SKIM A THIN COAT OF JOINT COMPOUND OVER THE TAPE. COVER DRYWALL SCREW HOLES.
LEVEL 3: APPLY A COAT OF JOINT COMPOUND TO THE TAPE AND SCREWS.
LEVEL 4: APPLY ANOTHER COAT OF JOINT COMPOUND TO THE TAPE AND SCREWS. SAND.
LEVEL 5: APPLY ANOTHER COAT OF JOINT COMPOUND TO THE TAPE AND SCREWS. SAND.

ALL GRAPHICS & MURALS REQUIRE A LEVEL 5 FINISH

WALL SURFACE PREPARATION

1. REPAIR ANY EXISTING WALL DAMAGE (HOLES, LOOSE JOINTS, CHIPPED OR PEELING PAINT) TO LEVEL 4 FINISH.
2. CLEAN THE WALL PRIOR TO PRIMING AND PAINTING.

PRIMER AND PAINT

1. TWO COATS OF PRIMER REQUIRED. LET THE PRIMER DRY PER MANUFACTURE SPECIFICATIONS BEFORE APPLYING TOP COAT.
2. TINTED PRIMERS MAY CAUSE BLEED THROUGH ISSUES AND SHOULD NOT BE USED.
3. DO NOT USE MATTE PAINT OR PAINT WITH SILICONE, WAXES, GRAFFITI-RESISTANT, OR TEXTURIZING ADDITIVES.
4. USE A SHORT NAP (1/4") ROLLER.
5. ALLOW THE FINAL COAT OF PAINT TO DRY FOR AT LEAST FIVE DAYS BEFORE APPLYING GRAPHICS. UNDER-CURED PAINT MAY CONTINUE TO OUTGAS AND CAUSE BUBBLES UNDER GRAPHICS SEVERAL DAYS AFTER THE INSTALL IS COMPLETE DESPITE A SMOOTH INSTALLATION.

USE THE FOLLOWING PAINT AND PRIMERS: (PAINT AND PRIMER SHOULD CREATE A BOND THAT WON'T RELEASE WHEN ADHESIVES ARE APPLIED)
PRIMER: SHERWIN WILLIAMS PROMAR 200 INTERIOR LATEX PRIMER B28W600 SERIES
PAINT: SHERWIN WILLIAMS PROMAR ZERO VOC LATEX SEMI-GLOSS.
TOP COAT: SEE FINISH SCHEDULE

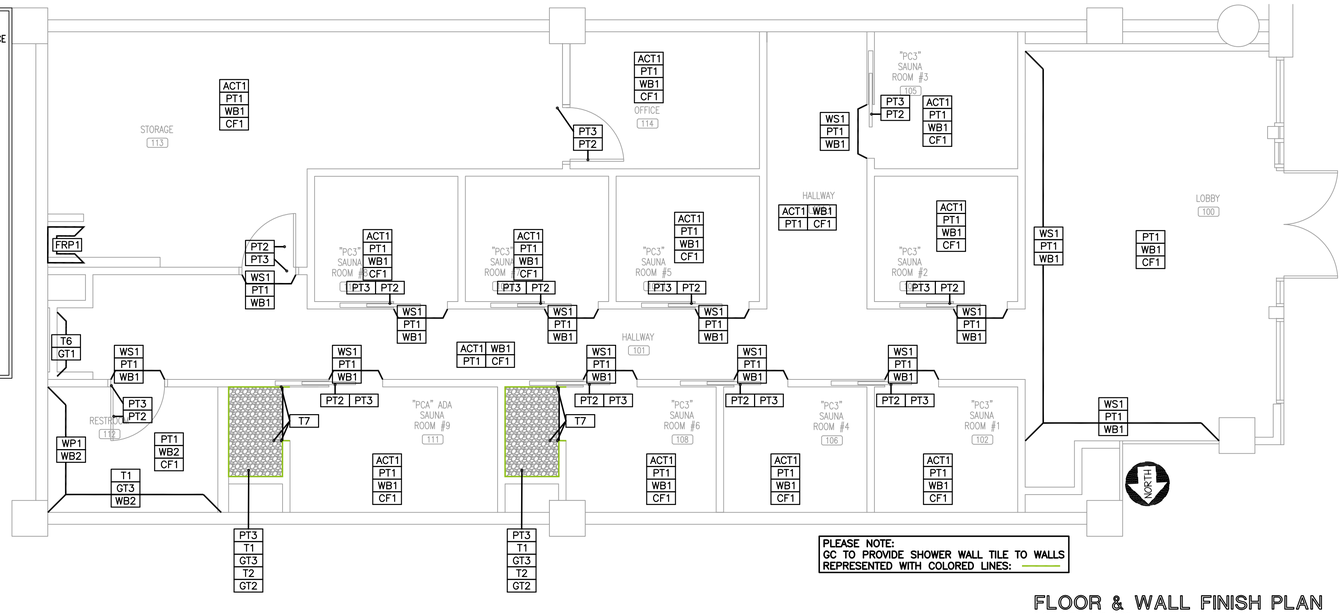

FLOOR & WALL FINISH PLAN
SCALE: 1/4"=1'-0"

CONTRACTOR SHALL FIELD VERIFY ALL EXISTING CONDITIONS AND DIMENSIONS PRIOR TO BID AND REPORT ANY DISCREPANCIES BACK TO OWNER. G.C. SHALL COORDINATE ALL SUB CONTRACTORS AND ENSURE A COMPLETE FULLY CODE COMPLIANT AND PROFESSIONALLY FINISHED TENANT SPACE.

ISSUED / REVISIONS:

EMR ENGINEERING AND DESIGN PLLC
PO Box 213 (Nelling)
4236 HWY 3650
Annville, KY 40402
FIRM 23179
Phone (606)-364-2886
Fax (606)-364-5100
E-Mail: eric@emrengineers.com
Web Address: emrengineers.com

COLORADO REGISTERED PROFESSIONAL ENGINEER 36557 9.13.23 PROFESSIONAL ENGINEER

BIDDING QUESTIONS CONTACT 920-757-1486

PERSPIRE SAUNA STUDIO

2450 SOUTH UNIVERSITY BLVD
SUITE 101
DENVER, CO 80210

CHECKED BY:	Staff
DRAWN BY:	Staff
DATE:	SEPTEMBER 12, 2023
SCALE:	PER PLAN
PROJECT No.:	PSS 2401

SHEET TITLE
WALL & FLOOR FINISH PLAN

SHEET No.
1.09

PERSPIRE – GRAPHICS SCHEDULE

ITEM NUMBER	DESCRIPTION	MOUNTING HEIGHT	SUPPLIED BY	INSTALLED BY	RECEIVED BY
G1	PERSPIRE LOGO	+70" AFF TO CENTER	OWNER	OWNER	OWNER
G2	TOWEL DROP SIGN	+40" AFF TO CENTER	OWNER	OWNER	OWNER

*NOTE : NOT ALL GRAPHICS ARE NECESSARILY IN USE.
*NOTE : GC TO CONFIRM PAINT FINISH WITH GRAPHIC PROVIDER.

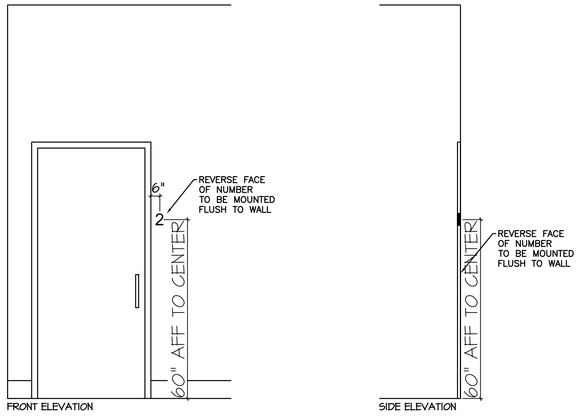

*GC TO PRE-DRILL AND ADHESIVE NUMBERS TO THE WALL TO LAY FLAT TO THE WALL. SIMILAR TO A PIN MOUNTED INSTALLATION. MFG SUPPLIED ANCHORS TO BE DISCARDED, NOT NEEDED FOR THIS TYPE OF INSTALLATION.

2/1.10 ROOM NUMBER INSTALLATION DETAIL
N.T.S

PERSPIRE – MANUFACTURED PRODUCTS SCHEDULE

ITEM#	DESCRIPTION	PRODUCT NUMBER	SUPPLIED BY	INSTALLED BY	RECEIVED BY	NOTES
100	SAUNA ROOM FLOATING SHELF	PSS100	FCD	GC	GC	
105	WOODEN DOWEL HOOKS (SET OF 3)	PSS105	FCD	GC	GC	(1) SET PER SAUNA ROOM, LOCATION TBD BY OWNER MOUNTED AT +80" AFF IN STANDARD ROOMS, +48" AFF IN ADA SAUNA ROOMS
410	BACKLIT RESTROOM MIRROR	PSS410	FCD	GC	GC	
436	VANITY FINISHED BOTH	PSS436	FCD	GC	GC	GC TO PROVIDE AND INSTALL FLOATING BRACKET AT TIME OF FRAMING SEE DETAIL ON FRAMING SHEET AND CONFIRM LOCATION AT TIME OF INSTALL
1120_04	WALL CEDAR SIDING LUMBER 4FT WIDE	PSS1120_04	FCD	GC	GC	SEE FINISH SCHEDULE AND ELEVATIONS FOR LOCATIONS OF INSTALL AND DETAIL ON FRAMING SHEET
1120_05	WALL CEDAR SIDING LUMBER 5FT WIDE	PSS1120_05	FCD	GC	GC	SEE FINISH SCHEDULE AND ELEVATIONS FOR LOCATIONS OF INSTALL AND DETAIL ON FRAMING SHEET
1120_08	WALL CEDAR SIDING LUMBER 8FT WIDE	PSS1120_08	FCD	GC	GC	SEE FINISH SCHEDULE AND ELEVATIONS FOR LOCATIONS OF INSTALL AND DETAIL ON FRAMING SHEET
1120_10	WALL CEDAR SIDING LUMBER 10FT WIDE	PSS1120_10	FCD	GC	GC	SEE FINISH SCHEDULE AND ELEVATIONS FOR LOCATIONS OF INSTALL AND DETAIL ON FRAMING SHEET
3003	RECEPTION CEDAR PANEL	PSS3003	FCD	GC	GC	
3008	RECEPTION ADA RIGHT	PSS3008	FCD	GC	GC	
3013	LOBBY RETAIL DISPLAY	PSS3013	FCD	GC	GC	
3301	HALLWAY TOWEL DISPOSABLE BASE	PSS3301	FCD	GC	GC	FACE AND DOORS TO BE PAINTED PT2
3528	MANAGER'S DESK COUNTERTOP	PSS3528	FCD	GC	GC	2 BRACKETS INCLUDED FOR GC TO INSTALL
	SLIDING SAUNA POCKET DOOR	PSS DOOR	FCD	GC	GC	PRE-FINISHED/PRE-CORED SLAB: SEE DETAIL ON NEW WALL CONSTRUCTION PLAN

ITEM 105 (MANUFACTURED SCHEDULE)

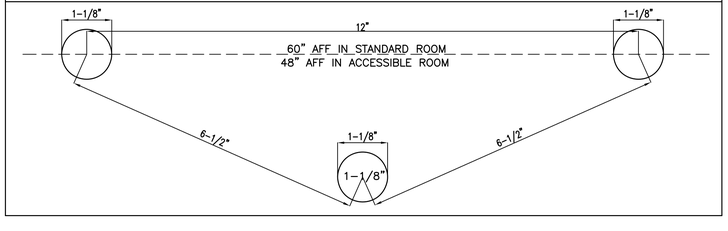

PERSPIRE – TOILET ACCESSORIES

ITEM#	DESCRIPTION	MANUFACTURER	PRODUCT SERIES	PRODUCT NUMBER	SUPPLIED BY	INSTALLED BY	NOTES
TA2	STAINLESS STEEL GRAB BARS	BOBRICK	B6806 SERIES	1-1/2" DIA WITH SNAP FLANGE	GC	GC	36", 42", AND 18" LENGTHS
TA3	WALL MOUNTED PAPER TOWEL DISP	CINTAS	SIGNATURE SERIES	STAINLESS STEEL / SILVER	OWNER	OWNER	
TA4	WALL MOUNTED SOAP DISP	CINTAS	SIGNATURE SERIES	STAINLESS STEEL / SILVER	OWNER	OWNER	
TA5	TOILET TISSUE DISPENSER	CINTAS	SIGNATURE SERIES	STAINLESS STEEL / SILVER	OWNER	OWNER	
TA6	RESTROOM SINK	KOHLER	VOX 22" VESSEL SINK WITH OVERFLOW	K-2660-1-0 (WHITE)	GC	GC	FCD TO PROVIDE VANITY, GC TO PROVIDE & INSTALL VANITY BRACKET SUPPORT AT TIME OF FRAMING
TA7	ELONGATED TOILET	ZURN	2 PIECE, WHITE, STAINLESS STEEL HANDLE	Z5560	GC	GC	FLOOR MOUNTED
TA8	RESTROOM FAUCET & DRAIN	AMERICAN STANDARD	PARADIGM SELECTRONIC FAUCET	702B115.295 (BRUSHED NICKEL)	GC	GC	ELECTRICAL OUTLET TO BE LOCATED UNDER THE SINK VANITY.
TA9	WALL MOUNTED 3 COMPARTMENT SOAP DISPENSER	ANSELF	CHUANGDIAN	B075F7HR8G	GC	GC	
TA10	HANDSHOWER KIT	KOHLER	AWAKEN G110	K-99243-G-BN	GC	GC	
TA11	SHOWER VALVE	KOHLER	PITCH	K-TS74042-4-BN	GC	GC	
TA12	MOP SINK	FIAT OR EQUAL	MOLDED STONE OR EQUAL	MSB2424 OR EQUAL	GC	GC	
TA13	MOP SINK FAUCET	T&S BRASS OR EQUAL	WALL MOUNT	B-0665-BSTR OR EQUAL	GC	GC	
TA14	AUTOMATIC HAND SANITIZER DISPENSER	CINTAS	SIGNATURE SERIES	STAINLESS STEEL / SILVER	OWNER	OWNER	AT TOWEL DROP
TA15	TOILET SEAT COVER DISPENSER	BOBRICK	CLASSIC SERIES	B-4221	GC	GC	
TA16	SINGLE HANDLE SHOWER PVD	FONTAINE BY ITALIA	HOTEL DE VILLE COLLECTION	MFF-HVS-BN	GC	GC	
TA17	SHOWER DRAIN	KOHLER	CLEARFLO TILE-IN	K-9136BN	GC	GC	INSTALL SURE SEAL WATERLESS TRAP PREMIER AND DEEP SEAL TRAP
TA18	SHOWER SEAT	ALFI	TEAK WOOD WALL MOUNT SHOWER SEAT (ADA COMPLIANT)	ABS16S-PC	GC	GC	

PLEASE NOTE: NOT ALL ACCESSORIES ARE NECESSARILY IN USE

PERSPIRE – FURNITURE & EQUIPMENT SCHEDULE

ITEM#	DESCRIPTION	MANUFACTURER	SKU NUMBER	SUPPLIED BY	INSTALLED BY	RECEIVED BY	NOTES
1	GUEST CHAIR	FCD PROCUREMENT	FCD PROCUREMENT	FCD	GC	GC	
2	REACH-IN REFRIGERATOR	PREMIUM LEVELLA	PRF125DX	OWNER	GC	GC	12.5 CU FT
4	PCA (ADA) SAUNA – 77" X 64.5" X 83.7"	CLEARLIGHT	CUSTOM	OWNER	OWNER	GC	OWNER TO VARNISH AND INSTALL PERSPIRE SAUNA SIGN GC TO DISPOSE OF PACKAGING
6	TELEVISION	SAMSUNG SERIES 7 43"	UN43TU7000FXZA	OWNER	GC	GC	
7	SAROS INTEGRATOR 6.5" 2-WAY IN-CEILING SPEAKER	SAROS	SAROS IC16T	OWNER	OWNER	OWNER	
8	STORAGE RACK (TOWELS)	HUSKY	ERZ902490W-5	OWNER	GC	GC	
9	STORAGE RACK (18X48)	ULINE	H-2941-72	OWNER	GC	GC	
10	STORAGE RACK (18X60)	ULINE	H-2941-72	OWNER	GC	GC	
11	CHANGING ROOM CHAIR	PSS CORP. ASSIST.	OWNER	OWNER	GC	GC	
12	UNDER COUNTER FRIDGE	MAGIC CHEF	MCAR240SE2	OWNER	GC	GC	BELOW POS
13	CASH DRAWER	PSS CORP. ASSIST.	OWNER	OWNER	GC	GC	
15	TOWEL DROP BIN	PSS CORP. ASSIST.	OWNER	OWNER	GC	GC	
16	STOOL – FRONT DESK	PSS CORP. ASSIST.	OWNER	OWNER	GC	GC	
17	WALL MIRROR 12" X 48" (ROUNDED AND POLISHED)	GC TO PROVIDE LOCALLY	GC TO PROVIDE LOCALLY	GC	GC	GC	MIRROR TO BE ATTACHED TO WALL WITH ADHESIVE AND A SMALL RUST RESISTANT METAL U-CHANNEL AT THE BASE
19	DUAL ARM SWINGOUT MOUNT FOR FLAT PANEL DISPLAYS	CRIMSON AV	AU42	OWNER	GC	GC	
20	RETAIL BAR	FCD PROCUREMENT	FCD PROCUREMENT	FCD	GC	GC	
21	ROOM NUMBERS	FCD PROCUREMENT	FCD PROCUREMENT	FCD	GC	GC	TO BE INSTALLED AT +60" AFF TO TOP OF NUMBER AND 3" TO EDGE OF NUMBER FROM DOOR CASING
22	FILTERED WATER DISPENSER (BUILT-IN)	ELKAY	LBWD06 – WHITE	GC	GC	GC	
35	SAUNA (PC3) – 77" X 48" X 83.7"	CLEARLIGHT	CUSTOM	OWNER	OWNER	GC	OWNER TO VARNISH AND INSTALL PERSPIRE SAUNA SIGN
37	UNDER COUNTER FRIDGE	MAGIC CHEF	HMAR170STE	OWNER	GC	GC	BELOW MANAGER'S DESK
38	FRAMED OUT WALL MIRROR 42" X 84"	GC TO PROVIDE LOCALLY	GC TO PROVIDE LOCALLY	GC	GC	GC	TRIM TO MATCH DOOR CASING, PAINTED PT3, INSTALLED DIRECTLY ABOVE THE WALL BASE.

*NOTE : OWNER SUPPLIED ITEMS ARE SUBJECT TO CHANGE.

GC TO ACCEPT DELIVERY OF SAUNAS FROM CLEARLIGHT AND DISPOSE OF ALL SAUNA PACKAGING MATERIALS. SAUNAS TO BE COORDINATED ON A SINGLE OR MULTIPLE SHIPMENTS. OWNER TO INSTALL ONCE ON SIGHT. OWNER TO VARNISH AND INSTALL THE PERSPIRE SAUNA SIGN ONCE ON SITE PER THE PERSPIRE PROVIDED INSTRUCTIONS.

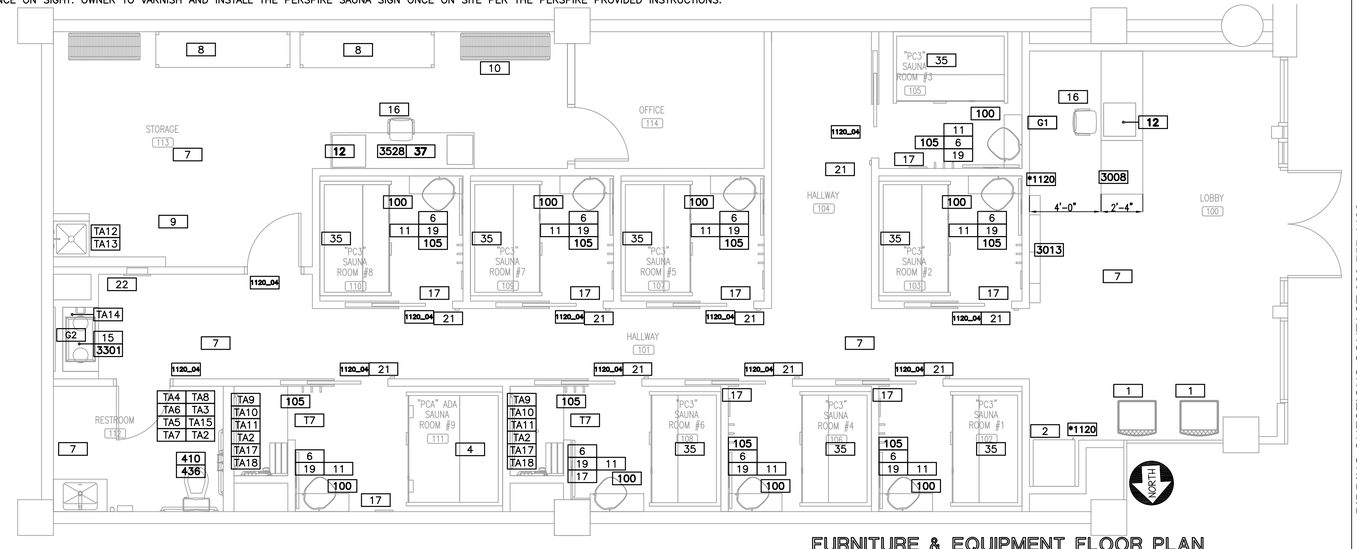

FURNITURE & EQUIPMENT FLOOR PLAN
SCALE: 1/4"=1'-0"

CONTRACTOR SHALL FIELD VERIFY ALL EXISTING CONDITIONS AND DIMENSIONS PRIOR TO BID AND REPORT ANY DISCREPANCIES BACK TO OWNER. G.C. SHALL COORDINATE ALL SUB CONTRACTORS AND ENSURE A COMPLETE FULLY CODE COMPLIANT AND PROFESSIONALLY FINISHED TENANT SPACE.

ISSUED / REVISIONS:

EMR ENGINEERING AND DESIGN PLLC
PO Box 213 (Nelling)
4236 HWY 36S
Annville, KY 40402
FIRM 23179
Phone (606)-364-2886
Fax (606)-364-5100
E-Mail: eric@emrengineers.com
Web Address: emrengineers.com

COLORADO REGISTERED PROFESSIONAL ENGINEER 36557 9.13.23

BIDDING QUESTIONS CONTACT 920-757-1486

PERSPIRE SAUNA STUDIO

2450 SOUTH UNIVERSITY BLVD
SUITE 101
DENVER, CO 80210

CHECKED BY:	Staff
DRAWN BY:	Staff
DATE:	SEPTEMBER 12, 2023
SCALE:	PER PLAN
PROJECT No.:	PSS 2401

SHEET TITLE
FURNITURE PLAN

SHEET No.
1.10

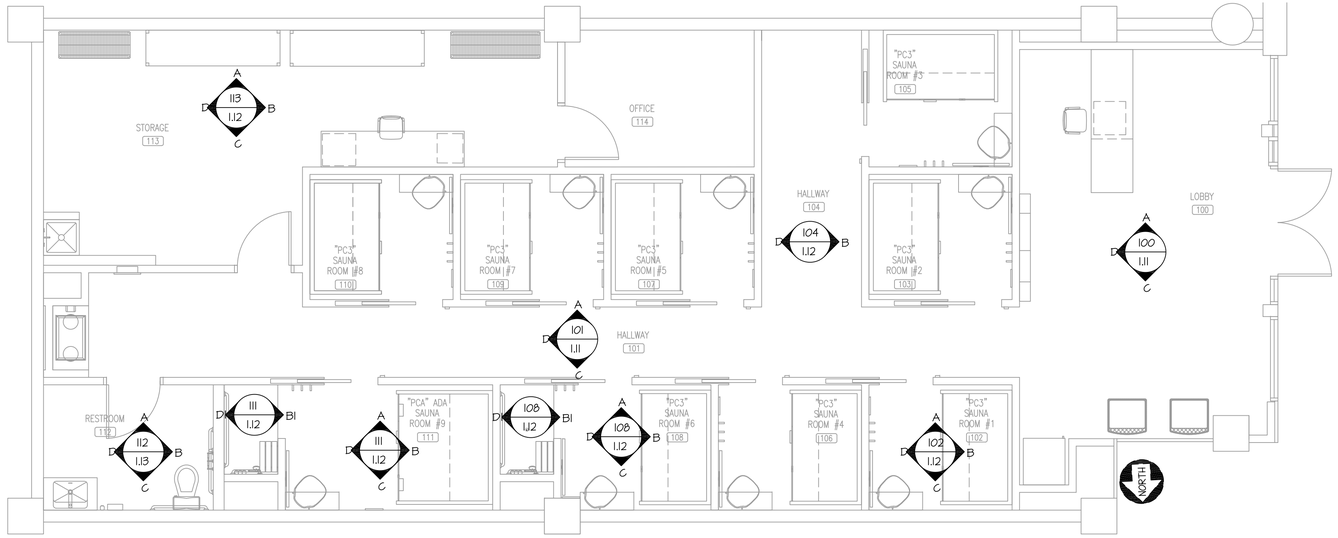

1 INTERIOR ELEVATIONS PLAN
SCALE: 1/4"=1'-0"

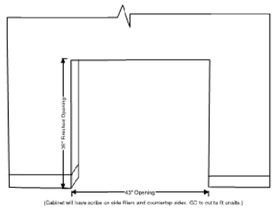

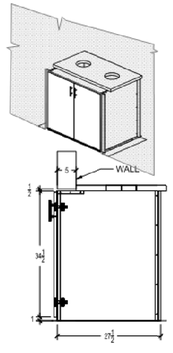

1 TOWEL DROP DETAIL
N.T.S

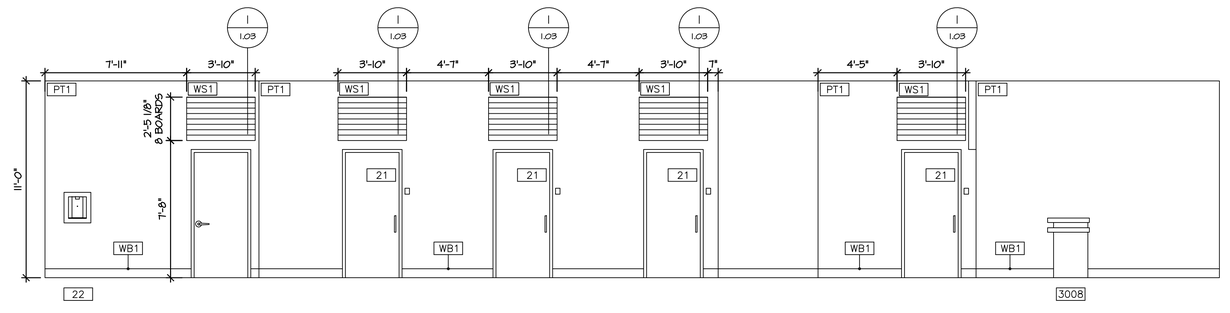

A HALLWAY - 101, LOBBY - 100
SCALE 1/4"=1'-0"

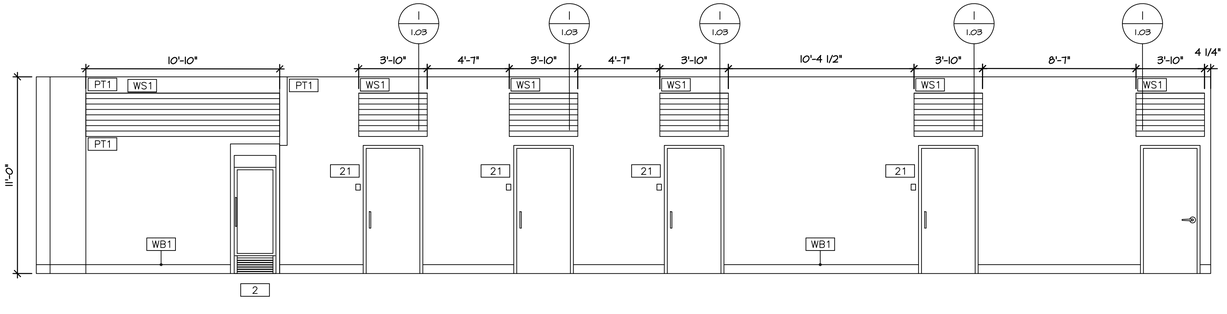

C HALLWAY - 101, LOBBY - 100
SCALE 1/4"=1'-0"

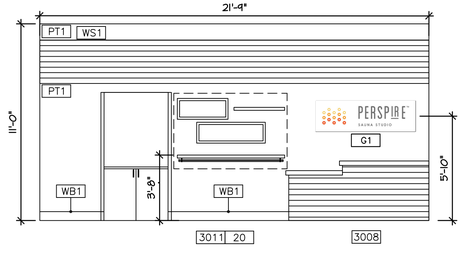

D LOBBY - 100
SCALE 1/4"=1'-0"

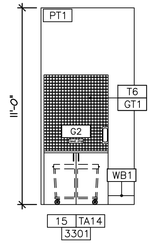

D HALLWAY - 101
SCALE 1/4"=1'-0"

CONTRACTOR SHALL FIELD VERIFY ALL EXISTING CONDITIONS AND DIMENSIONS PRIOR TO BID AND REPORT ANY DISCREPANCIES BACK TO OWNER. G.C. SHALL COORDINATE ALL SUB CONTRACTORS AND ENSURE A COMPLETE FULLY CODE COMPLIANT AND PROFESSIONALLY FINISHED TENANT SPACE.

ISSUED / REVISIONS:

ENGINEERING AND DESIGN PLLC
PO Box 213 (Mailing)
4236 HWY 3630
Annville, KY 40402
FIRM 23179
Phone (606)-364-2886
Fax (606)-364-5100
E-Mail: eric@emrengineers.com
Web Address: emrengineers.com

COLORADO REGISTERED PROFESSIONAL ENGINEER
ERIC ENGELL
36587
9.11.23

PERSPIRE SAUNA STUDIO
2450 SOUTH UNIVERSITY BLVD
SUITE D1
DENVER, CO 80210

BIDDING QUESTIONS CONTACT 920-757-1486

CHECKED BY:	Staff
DRAWN BY:	Staff
DATE:	SEPTEMBER 12, 2023
SCALE:	PER PLAN
PROJECT No.:	PSS 2401

SHEET TITLE
INTERIOR ELEVATIONS

SHEET No.
1.11

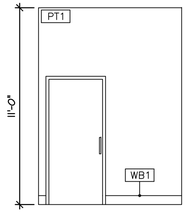

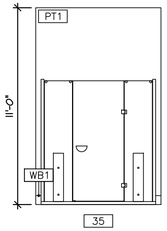

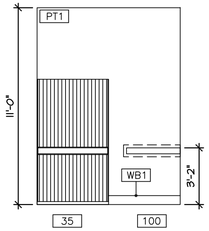

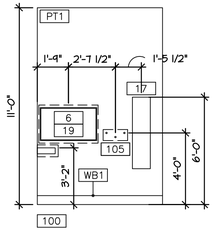

A B C D SAUNA ROOM #1 (TYPICAL "PC3" SAUNA ROOM) - 102
SCALE 1/4"=1'-0"

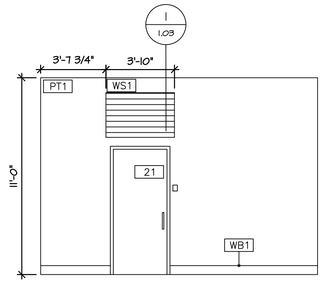

B HALLWAY - 104
SCALE 1/4"=1'-0"

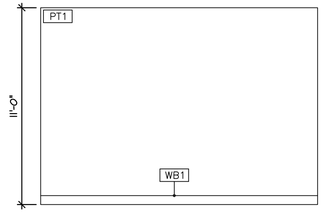

D HALLWAY - 104
SCALE 1/4"=1'-0"

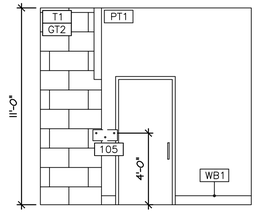

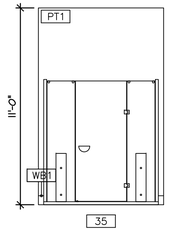

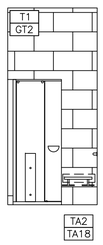

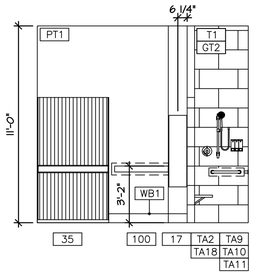

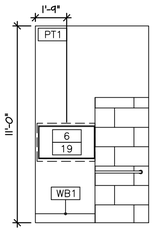

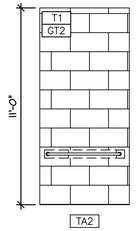

A B B1 C D D1 SAUNA ROOM #6 - 108 - WITH SHOWER
SCALE 1/4"=1'-0"

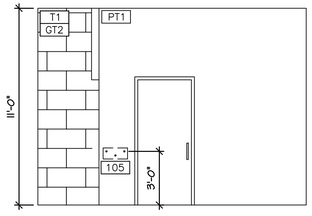

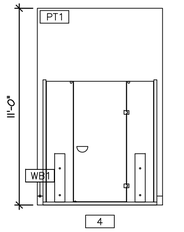

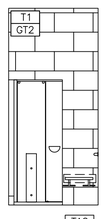

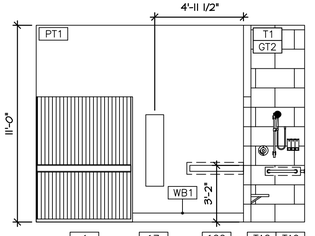

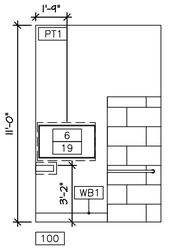

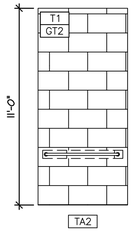

A B B1 C D D1 ADA SAUNA ROOM #9 - 111 - WITH SHOWER
SCALE 1/4"=1'-0"

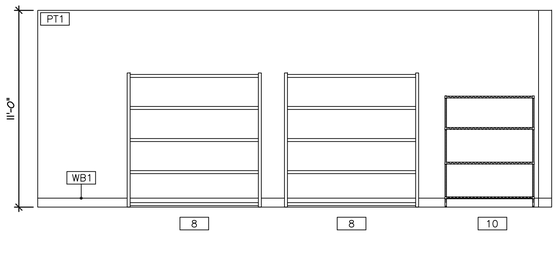

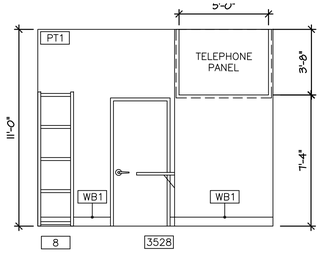

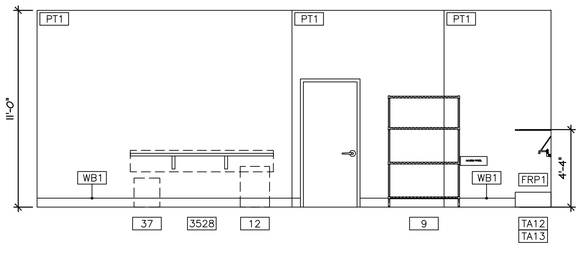

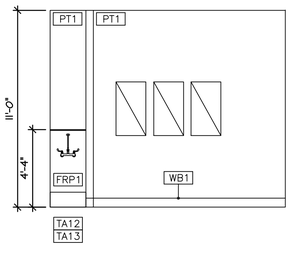

A B C D STORAGE - 113
SCALE 1/4"=1'-0"

CONTRACTOR SHALL FIELD VERIFY ALL EXISTING CONDITIONS AND DIMENSIONS PRIOR TO BID AND REPORT ANY DISCREPANCIES BACK TO OWNER. G.C. SHALL COORDINATE ALL SUB CONTRACTORS AND ENSURE A COMPLETE FULLY CODE COMPLIANT AND PROFESSIONALLY FINISHED TENANT SPACE.

ISSUED / REVISIONS:

ENGINEERING AND DESIGN PLLC
PO Box 213 (Nelling)
4236 HWY 3650
Annville, KY 40402
FIRM 23179
Phone (606)-364-2886
Fax (606)-364-5100
E-Mail: eric@emrengineers.com
Web Address: emrengineers.com

COLORADO REGISTERED
ERIC ENGEL
36557
PROFESSIONAL ENGINEER
9.13.23

BIDDING QUESTIONS CONTACT 920-757-1486

PERSPIRE SAUNA STUDIO

2450 SOUTH UNIVERSITY BLVD
UNIT D1
DENVER, CO 80210

CHECKED BY:	Staff
DRAWN BY:	Staff
DATE:	SEPTEMBER 12, 2023
SCALE:	PER PLAN
PROJECT No.:	PSS 2401

SHEET TITLE

INTERIOR ELEVATIONS

SHEET No.

1.12

PERSPIRE – TOILET ACCESSORIES

ITEM#	DESCRIPTION	MANUFACTURER	PRODUCT SERIES	PRODUCT NUMBER	SUPPLIED BY	INSTALLED BY	NOTES
TA2	STAINLESS STEEL GRAB BARS	BOBRICK	B6806 SERIES	1-1/2" DIA WITH SNAP FLANGE	GC	GC	36", 42", AND 18" LENGTHS
TA3	WALL MOUNTED PAPER TOWEL DISP	CINTAS	SIGNATURE SERIES	STAINLESS STEEL / SILVER	OWNER	OWNER	
TA4	WALL MOUNTED SOAP DISP	CINTAS	SIGNATURE SERIES	STAINLESS STEEL / SILVER	OWNER	OWNER	
TA5	TOILET TISSUE DISPENSER	CINTAS	SIGNATURE SERIES	STAINLESS STEEL / SILVER	OWNER	OWNER	
TA6	RESTROOM SINK	KOHLER	VOX 22" VESSEL SINK WITH OVERFLOW	K-2660-1-0 (WHITE)	GC	GC	FCD TO PROVIDE VANITY, GC TO PROVIDE & INSTALL VANITY BRACKET SUPPORT AT TIME OF FRAMING
TA7	ELONGATED TOILET	ZURN	2 PIECE, WHITE, STAINLESS STEEL HANDLE	Z5560	GC	GC	FLOOR MOUNTED
TA8	RESTROOM FAUCET & DRAIN	AMERICAN STANDARD	PARADIGM SELECTRONIC FAUCET	702B115.295 (BRUSHED NICKEL)	GC	GC	ELECTRICAL OUTLET TO BE LOCATED UNDER THE SINK VANITY.
TA9	WALL MOUNTED 3 COMPARTMENT SOAP DISPENSER	ANSELF	CHUANGDIAN	B075F7HR8G	GC	GC	
TA10	HANDSHOWER KIT	KOHLER	AWAKEN G110	K-99243-G-BN	GC	GC	
TA11	SHOWER VALVE	KOHLER	PITCH	K-TS74042-4-BN	GC	GC	
TA12	MOP SINK	FIAT OR EQUAL	MOLDED STONE OR EQUAL	MSB2424 OR EQUAL	GC	GC	
TA13	MOP SINK FAUCET	T&S BRASS OR EQUAL	WALL MOUNT	B-0665-BSTR OR EQUAL	GC	GC	
TA14	AUTOMATIC HAND SANITIZER DISPENSER	CINTAS	SIGNATURE SERIES	STAINLESS STEEL / SILVER	OWNER	OWNER	AT TOWEL DROP
TA15	TOILET SEAT COVER DISPENSER	BOBRICK	CLASSIC SERIES	B-4221	GC	GC	
TA16	SINGLE HANDLE SHOWER PVD	FONTAINE BY ITALIA	HOTEL DE VILLE COLLECTION	MFF-HVS-BN	GC	GC	
TA17	SHOWER DRAIN	KOHLER	CLEARFLO TILE-IN	K-9136BN	GC	GC	INSTALL SURE SEAL WATERLESS TRAP PREMIER AND DEEP SEAL TRAP
TA18	SHOWER SEAT	ALFI	TEAK WOOD WALL MOUNT SHOWER SEAT (ADA COMPLIANT)	ABS16S-PC	GC	GC	

PLEASE NOTE: NOT ALL ACCESSORIES ARE NECESSARILY IN USE

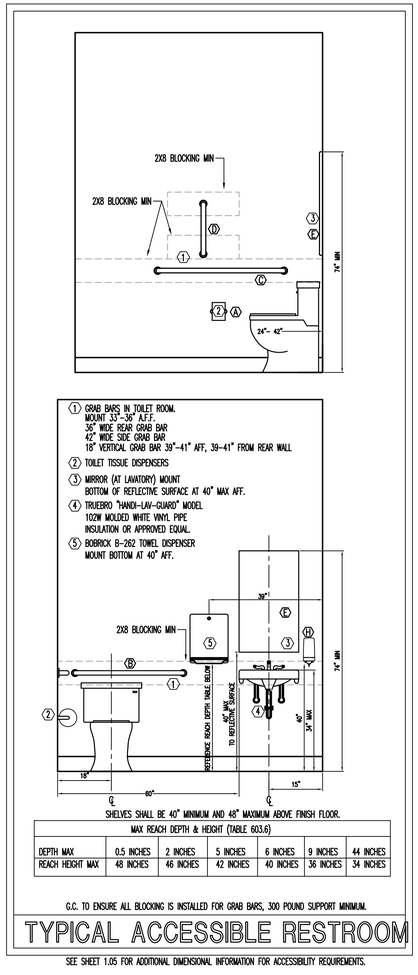

SHELVES SHALL BE 40" MINIMUM AND 48" MAXIMUM ABOVE FINISH FLOOR.

MAX REACH DEPTH & HEIGHT (TABLE 603.6)						
DEPTH MAX	0.5 INCHES	2 INCHES	5 INCHES	6 INCHES	9 INCHES	44 INCHES
REACH HEIGHT MAX	48 INCHES	46 INCHES	42 INCHES	40 INCHES	36 INCHES	34 INCHES

G.C. TO ENSURE ALL BLOCKING IS INSTALLED FOR GRAB BARS, 300 POUND SUPPORT MINIMUM.

TYPICAL ACCESSIBLE RESTROOM

SEE SHEET 1.05 FOR ADDITIONAL DIMENSIONAL INFORMATION FOR ACCESSIBILITY REQUIREMENTS.

A B C D REST ROOM - 112 (TYPICAL)
SCALE 1/4"=1'-0"

RESTROOM ACCESSORIES

SUPPLIED AND INSTALLED BY G.C. UNLESS NOTED OTHERWISE.

- (A) SURFACE-MOUNTED TWO ROLL TOILET TISSUE DISPENSER CINTAS – SIGNATURE SERIES –STAINLESS STEEL/SILVER
- (B) 36"W STAINLESS STEEL GRAB BAR, 1-1/2" DIAMETER, 1-1/2" CLEARANCE TO WALL BOBRICK MODEL #B-6806.99 X 36, (PEENED NON-SLIP GRIPPING SURFACE).
- (C) 42"W STAINLESS STEEL GRAB BAR, 1-1/2" DIAMETER, 1-1/2" CLEARANCE TO WALL BOBRICK MODEL #B-6806.99 X 42, (PEENED NON-SLIP GRIPPING SURFACE).
- (D) 18"W STAINLESS STEEL GRAB BAR, 1-1/2" DIAMETER, 1-1/2" CLEARANCE TO WALL BOBRICK MODEL #B-6809.99 X 18 (PEENED NON-SLIP GRIPPING SURFACE)
- (E) MIRROR – 24" X 36" CUSTOM – FCD
- (F) PAPER TOWEL DISPENSER – CINTAS – SIGNATURE SERIES –STAINLESS STEEL/SILVER
- (G) NOT USED
- (H) SOAP DISPENSOR – CINTAS – SIGNATURE SERIES –STAINLESS STEEL/SILVER

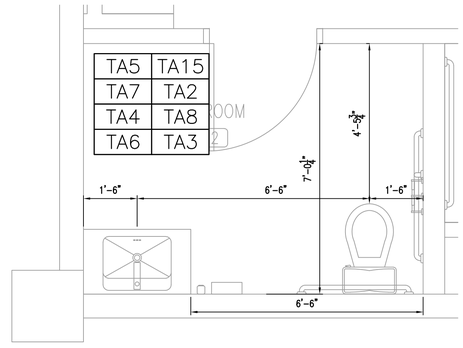

ENLARGED RESTROOM

SCALE: 1/2"=1'-0"

ENGINEERING AND DESIGN PLLC
PO Box 213 (Nelling)
4236 HWY 36S
Annville, KY 40402
Phone (606)-364-2886
Fax (606)-364-5100
E-Mail: eric@emrengineers.com
Web Address: emrengineers.com
FIRM 23179

COLORADO REGISTERED ERIC ENGEL 36557 PROFESSIONAL ENGINEER 9.13.23

CONTRACTOR SHALL FIELD VERIFY ALL EXISTING CONDITIONS AND DIMENSIONS PRIOR TO BID AND REPORT ANY DISCREPANCIES BACK TO OWNER. G.C. SHALL COORDINATE ALL SUB CONTRACTORS AND ENSURE A COMPLETE FULLY CODE COMPLIANT AND PROFESSIONALLY FINISHED TENANT SPACE.

ISSUED / REVISIONS:

BIDDING QUESTIONS CONTACT 920-757-1486

PERSPIRE SAUNA STUDIO

2450 SOUTH UNIVERSITY BLVD
SUITE 101
DENVER, CO 80210

CHECKED BY:	Staff
DRAWN BY:	Staff
DATE:	SEPTEMBER 12, 2023
SCALE:	PER PLAN
PROJECT No.:	PSS 2401

SHEET TITLE

TOILET ROOM ELEVATIONS

SHEET No.

1.13

GENERAL CONDITIONS

1. THE GENERAL CONTRACTOR SHALL VERIFY ALL CONDITIONS AND MEASUREMENTS ON THE JOB AND SHALL BE STRICTLY RESPONSIBLE FOR THE SAME. ANY QUESTIONS AND OR DISCREPANCIES SHALL BE BROUGHT TO THE IMMEDIATE ATTENTION OF THE FCDADSON PRIOR TO START OF WORK AT JOB SITE.
2. THE GENERAL CONTRACTOR SHALL BE RESPONSIBLE FOR THE WORK OF ALL MASONRY, CARPENTRY, PLUMBING, HEATING, VENTILATING AND AIR CONDITIONING AND ELECTRICAL TRADES AND FOR THE COORDINATION OF THE WORK.
3. THE GENERAL CONTRACTOR SHALL BE RESPONSIBLE FOR THE WORK OF ALL EMPLOYEES, WHETHER HIS OWN, HIS SUBCONTRACTOR, OR THEIR EMPLOYEES.
4. THE GENERAL CONTRACTOR SHALL BE RESPONSIBLE FOR THE SAFETY OF ALL WORKMEN ON THIS PROJECT. ALL CONTRACTORS AND THEIR SUBCONTRACTORS DOING WORK UNDER THIS CONTRACT SHALL CARRY LIABILITY AND PROPERTY DAMAGE INSURANCE AGAINST ACCIDENTS OF ALL KINDS AND THE OWNER AND FCDADSON SHALL BE FURNISHED WITH CERTIFICATES OF SAID INSURANCE. CONTRACTORS SHALL FOLLOW THE SAFETY PROCEDURES IN CONNECTION WITH THE WORK OF THIS PROJECT. THIS SHALL BE THE RESPONSIBILITY OF THE GENERAL CONTRACTOR.
5. ALL WORK SHALL BE GUARANTEED BY THIS CONTRACTOR FOR A PERIOD OF ONE YEAR AFTER THE CERTIFICATE OF OCCUPANCY, CERTIFIED IN WRITING TO THE OWNER BY THE CONTRACTOR.
6. THE CONTRACTOR SHALL LEAVE THE BUILDING COMPLETELY FREE OF DUST AND READY FOR OCCUPANCY BY THE OWNER.
7. THE CONTRACTOR SHALL PERFORM ALL NECESSARY MEASURES TO ENSURE THAT NO DUST, DIRT OR OTHER CONSTRUCTION DEBRIS ENTERS ANY AREA OF THE BUILDING OTHER THAN THE AREA BEING ALTERED.
8. THE CONTRACTOR SHALL PERFORM ALL NECESSARY DEMOLITION AND REMOVALS AS INDICATED ON THE DRAWINGS, BUT NOT LIMITED THERE – TO IN ORDER TO COMPLETE THE WORK.
9. ALL WORK IN PROGRESS SHALL BE ADEQUATELY BRACED AND PROTECTED UNTIL BUILDING IS COMPLETED.
10. COORDINATE ALL DEMOLITION OF THE EXISTING STRUCTURE WITH THE OWNER AND FCDADSON. ENSURE THAT THE STRUCTURAL INTEGRITY OF THE EXISTING BUILDING WILL NOT BE IMPAIRED BY THE DEMOLITION. SHORE EXISTING CONSTRUCTION AS REQUIRED.
11. GENERAL CONTRACTOR SHALL BE RESPONSIBLE FOR THE REMOVAL OF THE EXISTING CABINETRY AND APPLIANCES AS WELL AS THE REMOVAL OF PACKAGING FOR THE NEW CABINETRY AND APPLIANCES.
12. THE GENERAL CONTRACTOR SHALL BE RESPONSIBLE FOR OBTAINING AND PAYING FOR ALL NECESSARY PERMITS, INSPECTIONS AND FINAL CERTIFICATE OF OCCUPANCY.
13. ALL WORK SHALL BE PERFORMED IN ACCORDANCE WITH THE CURRENT STATE BUILDING CODE AND ALL LOCAL CODES.
14. IF THE CONTRACTOR FAILS TO COMPLETE OR CORRECT ANY OF THE WORK ACCORDING TO THE CONSTRUCTION DOCUMENTS, THE OWNER OR FCDADSON MAY STOP WORK UNTIL THE WORK IS COMPLETED OR CORRECTED.
15. THE CONTRACTOR SHALL PROVIDE FREE ACCESS TO THE WORK BY THE OWNER, FCDADSON AND THEIR REPRESENTATIVES AT ALL TIMES.

GENERAL

1. PROJECT REQUIREMENTS: VERIFY WITH LANDLORD FOR ALLOWABLE TIMES OF CONSTRUCTION.
2. APPLY, OBTAIN, AND PAY FOR ALL PERMITS REQUIRED FOR THE WORK. SUBMIT COPIES OF ALL PERMITS TO OWNER AND TO FCDADSON.
3. COMPLY WITH ALL APPLICABLE BUILDING CODES AND RULES OF OTHER REGULATORY AGENCIES.
4. VERIFY FIELD DIMENSIONS BEFORE ORDERING FABRICATIONS OR PRODUCTS TO FIT IN PLACE. NOTIFY FCDADSON OF EXISTING CONDITIONS AND DIMENSIONS THAT DIFFER FROM THOSE SHOWN IN THE DRAWINGS.
5. UNLESS OTHERWISE NOTED, THE SUBJECT OF ALL IMPERATIVE SENTENCES IN THE SPECIFICATIONS AND THE DRAWINGS IS THE CONTRACTOR. FOR EXAMPLE, "PROVIDE AND INSTALL.." MEANS "CONTRACTOR SHALL PROVIDE AND INSTALL..".
6. WHERE THE TERMS "APPROVED EQUAL", "OTHER APPROVED", "OR EQUAL", "ACCEPTABLE", OR OTHER GENERAL QUALIFYING TERMS USED IN THESE NOTES, IT SHALL BE UNDERSTOOD THAT REFERENCE IS MADE TO THE JUDGMENT AND RULING OF ERIC ENGELL P.E., UNLESS APPROVED BY ERIC ENGELL P.E., NO SUBSTITUTIONS WILL BE MADE.
7. THE CONTRACTOR SHALL MAINTAIN A CURRENT AND COMPLETE SET OF CONSTRUCTION DRAWINGS ON SITE DURING PHASES OF CONSTRUCTION FOR USE OF ALL TRADES. THE CONTRACTOR SHALL RECORD ALL 'AS-BUILT' CONDITIONS AND SUBMIT COPY TO LANDLORD AND TENANT AT COMPLETION OF JOB. THE CONTRACTOR SHALL MAINTAIN A FIELD TELEPHONE AT THE JOB SITE.

CUTTING AND PATCHING

1. CUT AND PATCH AS REQUIRED TO COMPLETE THE WORK FOR:
    1. VISUAL QUALITY AS DIRECTED BY THE TENANT
    2. PLUMBING, HVAC, ELECTRICAL, AND COMMUNICATIONS SYSTEMS.
    3. FIRE RESISTANCE RATINGS.
    4. INSPECTION, PREPARATION AND PERFORMANCE.
2. CUT AND PATCH WITH CARE TO AVOID DAMAGE TO WORK, SAFETY HAZARDS, VIOLATION OF WARRANTY REQUIREMENTS, BUILDING CODE VIOLATIONS, OR MAINTENANCE PROBLEMS.

MATERIALS AND PRODUCTS

1. MATCH EXISTING MATERIALS WITH NEW MATERIALS SO THAT PATCHING WORK IN UNDETECTABLE.
2. INSPECT FIELD CONDITIONS TO IDENTIFY ALL WORK REQUIRED.
3. PERFORM WORK WITH WORKMEN SKILLED IN THE TRADES INVOLVED. PREPARE SAMPLE AREA OF EACH TYPE OF WORK FOR APPROVAL. PROTECT ADJACENT WORK FROM DAMAGE AND DIRT.
4. FOR CUTTING WORK, USE PROPER CUTTING TOOLS, NOT CHOPPING TOOLS. MAKE NEAT HOLES. MINIMIZE DAMAGE TO ADJACENT WORK. CHECK FOR CONCEALED UTILITIES AND STRUCTURE BEING CUTTING.
5. MAKE PATCHES, SEAMS, AND JOINTS DURABLE AND INCONSPICUOUS. TOLERANCES FOR PATCHING SHALL BE THE SAME AS FOR NEW WORK.
6. CLEAN WORK AREAS AND AREAS AFFECTED BY CUTTING AND PATCHING OPERATIONS AS DESCRIBED IN SECTION TITLES CLEANING AND MAINTENANCE DURING CONSTRUCTION AND FINAL CLEANING.

CONSTRUCTION PROCEDURES

1. PROVIDE ADMINISTRATIVE COORDINATION OF ALL WORK, INCLUDING TRAINED, QUALIFIED EMPLOYEES AND SUBCONTRACTORS, AND SUPERVISORY PERSONNEL.

CHANGE ORDER PROCEDURES

1. CHANGES IN THE WORK MAY BE REQUIRED WHICH WILL BE AUTHORIZED BY A CHANGE ORDER.
2. CHANGE ORDERS, SIGNED BY THE OWNER AND FCDADSON, TO AUTHORIZE CHANGES IN THE WORK WILL INCLUDE EQUIVALENT CHANGES IN THE CONTRACT SUM AND/OR TIME OF COMPLETION.
3. CHANGE ORDERS WILL BE NUMBERED IN SEQUENCE AND DATED.
4. A REQUEST FOR ESTIMATES FOR POSSIBLE CHANGES IS NOT A CHANGE ORDER OR A DIRECTION TO PROCEED WITH THE PROPOSED CHANGES. THAT CAN ONLY BE AUTHORIZED THROUGH A SIGNED CHANGED ORDER.

CLEANING & MAINTENANCE DURING CONSTRUCTION & FINAL CLEANING

1. KEEP THE BUILDING AND SITE WELL ORGANIZED AND CLEAN THROUGH OUT THE CONSTRUCTION PERIOD.
2. PROVIDE GENERAL CLEAN UP DAILY AND COMPLETE WEEKLY PICKUP AND REMOVAL OF ALL SCRAP AND DEBRIS FROM THE SITE. EXCEPTION – REUSABLE SCRAP SHALL BE STORED IN A NEATLY MAINTAINED, DESIGNATED STORAGE AREA.
3. AT COMPLETION OF WORK, REMOVE FROM THE JOB SITE ALL TOOLS AND EQUIPMENT, AND SURPLUS MATERIALS, EQUIPMENT, SCRAP, AND DEBRIS.
4. EXTERIOR OF BUILDING – INSPECT EXTERIOR SURFACES AND REMOVE ALL WASTE MATERIALS, PAINT DROPPINGS, SPOTS, STAINS OR DIRT.
5. INTERIOR OF BUILDING – INSPECT INTERIOR SURFACES AND REMOVE ALL WASTE MATERIALS, PAINT, DROPPINGS, SPOTS, STAINS OR DIRT.
6. GLASS – CLEAN INSIDE AND OUTSIDE SO THERE ARE NO SPOTS OR DIRT, AND NO SMUDGES OR STREAKS REMAINING FROM THE CLEANING PROCESS.
7. SCHEDULE FINAL CLEANING AS APPROVED BY THE OWNER TO ENABLE OWNER TO ACCEPT A COMPLETELY CLEAN WORK AREA.
8. FINAL CLEANING WILL BE COMPARABLE TO THAT PROVIDED BY PROFESSIONAL, SKILLED CLEANERS USING COMMERCIAL GRADE CLEANING MATERIAL. CLEANING MATERIAL WILL BE USED WITH CARE AND WILL BE COMPATIBLE WITH BUILDING MATERIALS AND FINISHES. FINAL CLEANING WILL INCLUDE REMOVAL OF DEBRIS FROM PUBLIC PAVED AREAS ADJACENT TO THE SITE.
9. OPERATING HARDWARE MUST PERFORM SMOOTHLY. REPAIR OR REPLACE ANY DEFECTIVE WORK. REDO REPAIRS IF WORK IS STILL DEFECTIVE AS DIRECTED BY THE FCDADSON. CLEAN THE WORK AREA AND REMOVE ALL SCRAP AND EXCESS MATERIALS FROM THE SITE.

GENERAL NOTES

1. THIS PROJECT SHALL BE CONSTRUCTED IN STRICT COMPLIANCE WITH THE CURRENT ISSUE OF THE LOCAL CODE AND ANY OTHER CODES HAVING JURISDICTION. CONTRACTOR TO VERIFY ALL CODE REQUIREMENTS BEFORE COMMENCEMENT OF CONSTRUCTION AND BRING ANY DISCREPANCIES BETWEEN THE CODES AND THE CONSTRUCTION DOCUMENTS TO THE ATTENTION OF FCDADSON.
2. DETAILS AND SECTIONS ON THE DRAWINGS ARE SHOWN AT SPECIFIC LOCATIONS AND ARE INTENDED TO SHOW GENERAL REQUIREMENTS THROUGHOUT. DETAILS NOTE "TYPICAL" IMPLY ALL CONDITIONS ARE TREATED SIMILAR. MODIFICATIONS ARE TO BE MADE BY THE CONTRACTOR TO ACCOMMODATE MINOR VARIATIONS.
3. THE CONTRACTOR SHALL TAKE REASONABLE CARE TO VERIFY AND PROTECT ALL SERVICE LINES AND EXISTING SITE FEATURES FROM DETERIORATION AND DAMAGE.
4. OWNER, DESIGNER OR FCDADSON SHALL NOT BE RESPONSIBLE FOR THE SAFETY AND CONSTRUCTION PROCEDURES, TECHNIQUES, OR THE FAILURE OF THE BUILDER TO CARRY OUT THE WORK IN ACCORDANCE WITH THE DRAWINGS OR THE APPLICABLE CODES.
5. THE CONTRACTOR SHALL OBTAIN ALL NECESSARY BUILDING PERMITS.
6. THE CONTRACTOR SHALL BRING ANY ERRORS AND OMISSIONS WHICH MAY OCCUR IN THE CONTRACT DOCUMENTS TO THE ATTENTION OF FCDADSON IN WRITING. WRITTEN INSTRUCTIONS SHALL BE OBTAINED FROM FCDADSON BEFORE PROCEEDING WITH THE WORK. THE CONTRACTOR WILL BE RESPONSIBLE FOR THE RESULTS OF ANY ERRORS, DISCREPANCIES, OR OMISSIONS IN THE CONSTRUCTION DOCUMENTS FOR WHICH NOTIFICATION AS INDICATED ABOVE WAS NOT GIVEN.
7. THE CONTRACTOR SHALL VERIFY ALL DIMENSIONS AND JOB CONDITIONS AT THE SITE SUFFICIENTLY IN ADVANCE OF THE WORK TO BE PERFORMED TO ASSURE THE ORDERLY PROGRESS OF THE WORK.
8. CONTRACTOR SHALL MAINTAIN THE PREMISES CLEAN AND FREE OF ALL TRASH, DEBRIS, AND SHALL PROTECT WORK FROM DAMAGE, SOILING, PAINT OVERSPRAY, ETC.
9. ALL EQUIPMENT, FIXTURES, GLAZING, FLOORS, ETC. SHALL BE LEFT CLEAN AND READY FOR OCCUPANCY UPON THE COMPLETION OF THE PROJECT.
10. THE DRAWINGS SHALL NOT BE SCALED. FIGURED DIMENSIONS TAKE PRECEDENCE OVER SCALE MEASUREMENTS AND LARGER SCALE DETAIL OVER SMALLER SCALE DRAWINGS.
11. THE CONTRACTOR SHALL VERIFY ALL EXISTING DIMENSIONS AND CONDITIONS IN THE FIELD. ALL NEW AND EXISTING WORK SHALL BE MODIFIED BY FIELD CONDITIONS. FCDADSON SHALL BE CONSULTED ON ALL MODIFICATIONS.
12. ANY AND ALL INTERPRETATIONS PERTAINING TO THE DRAWINGS SHALL BE MADE BY FCDADSON AND DESIGNER.
13. FCDADSON SHALL BE CONSULTED DURING THE COURSE OF CONSTRUCTION REGARDING EXISTING FRAMING CONDITIONS ONCE THEY ARE EXPOSED. UPON HIS/HER INSPECTION, THE PROPOSED STRUCTURAL MEMBERS SHOWN ON THESE DRAWINGS MAY BE RECONSIDERED OR REVISED.
14. ALL WORK SHALL BE PERFORMED IN STRICT ACCORDANCE WITH ALL PERTINENT CODES REGULATIONS AND THE REQUIREMENTS OF GOVERNING JURISDICTION.

METALS

1. PROVIDE ALL MISCELLANEOUS METAL ITEMS NOT LIMITED TO THE FOLLOWING TO COMPLETE THE WORK:
    1. NAILS, SCREWS AND BOLTS.
    2. REINFORCING BARS.
    3. STEEL LINTELS.
    4. WELDED WIRE MESH.

ROUGH CARPENTRY

1. ALL WOODS AND WOOD CONSTRUCTION SHALL COMPLY WITH THE FOLLOWING STANDARDS EXCEPT AS MODIFIED BY THESE SPECIFICATIONS:
    - AMERICAN INSTITUTE OF TIMBER CONSTRUCTION: STANDARD MANUAL.
    - NATIONAL FOREST PRODUCTS ASSOCIATION
    - SOUTHERN PINE INSPECTION BUREAU
    - TRUSS PLATE INSTITUTE
    - AMERICAN PLYWOOD ASSOCIATION
    - AMERICAN WOOD PRESERVERS ASSOCIATION
2. ALL STRUCTURAL LUMBERS SHALL BE DOUGLAS FIR LARCH, CONSTRUCTION GRADE, S4S, AIR–DRIED, NUMBER 2, WITH FB = 875 PSI, UNLESS OTHERWISE CALLED FOR ON THE PLANS. REJECT ANY DELIVERED FRAMING LUMBER THAT IS NOT GRADE – STAMPED AND CERTIFIED BY A BONA FIDE GRADING AGENCY.
3. DO NOT ACCEPT OR USE LUMBER THAT DEVIATES FROM GRADE STANDARDS OR HAS EXCESSIVE MOISTURE CONTENT OR OTHER DEFECTS. REMOVE UNSTAMPED OR DEFECTIVE LUMBER FROM THE JOB SITE.
4. STORE FRAMING LUMBER AND WOOD PANELS TO PREVENT DAMAGE AND MOISTURE ABSORPTION. STORE METAL CONNECTORS THAT ARE SUBJECT TO DAMAGE IN WEATHERTIGHT WRAPPING AND IN SAFE LOCATIONS AWAY FROM TRAFFIC OF OTHER SOURCES OF DAMAGE. STORE CHEMICALLY TREATED LUMBER AND WOOD PANELS OUT DOORS UNTIL INSTALLATION. KEEP CHEMICALLY TREATED LUMBER AND WOOD PANELS WELL VENTILATED IF MOVED INDOORS.
5. PROVIDE ALL BLOCKING AND PATCHING AND BUILDERS HARDWARE ITEMS INCLUDING, BUT NOT LIMITED TO, NAILS, SCREWS, BOLTS, HANGERS, ETC. AS REQUIRED TO PERFORM A COMPLETE JOB.
6. WOOD IN CONTACT WITH MASONRY SHALL BE PRESSURE TREATED.
7. REFER TO DRAWINGS FOR SIZES AND SPACING OF ALL NEW FRAMING MEMBERS: STUDS, FLOOR JOISTS, CEILING JOISTS, RAFTERS, RIDGES, VALLEY, ETC.
8. ALL BOLTS FOR SPECIFIED STRUCTURAL CONNECTIONS SHALL BE 5/8" DIAMETER WITH WASHERS AND NUTS, STAGGERED UP AND DOWN, SPACED 12" O.C.
9. CHECK AND VERIFY CORRECTIONS OF EACH STAGE OF FRAMING BEFORE INSTALLING SUBSEQUENT FRAMING: REMOVE ALL UNUSABLE WOOD SCRAPS FROM SITE WEEKLY AT MINIMUM AND BETWEEN EACH PHASE OF FRAMING. CALL FOR FCDADSON AND/OR BUILDING DEPARTMENT INSPECTION BEFORE CLOSING UP CONCEALED WORK.

BUILDING INSULATION

1. KEEP AREAS TO BE INSULATED CLEAN AND DRY. DO NOT INSTALL INSULATION WHERE IT MIGHT BE EXPOSED TO WATER.
2. UPON COMPLETION, CLEAN THE WORK AREA AND REMOVE ALL SCRAP AND EXCESS MATERIALS FROM THE SITE. ALLOW CONVENIENT ACCESS FOR INSPECTION OF WORK AND REPAIR OR REPAIR DEFECTIVE WORK AS DIRECTED BY FCDADSON.

DRYWALL

1. ALL INTERIOR WALLS AND CEILINGS SHALL BE FINISHED WITH 5/8" THICK GYPSUM BOARD DRYWALL: TYPE III, GRADER, CLASS I. TYPE X SHALL BE UTILIZED FOR ALL FIRE RATED WALLS.
2. ALL DRYWALL PRODUCTS SHALL BE PURCHASED FROM ONE MANUFACTURER SUCH AS USG OR AN APPROVED EQUAL. APPLY METAL CORNER BEADS TO ALL OUTWARD DRYWALL CORNERS. ALL JOINTS SHALL BE FINISHED WITH PERFORATED TAPE AND DRYWALL JOINT COMPOUND.
3. ALL WALLS AND CEILINGS SHALL BE TAPED, SPACKLED, SANDED AND READY FOR PAINT.
4. NOT USED
5. INSTALL BLOCKING AND BACKUPS TO SUPPORT ALL EDGES OF WALLBOARD.
6. KEEP WALLBOARDS MATERIALS DRY AND PROTECTED FROM MOISTURE. STORE WALLBOARD MATERIALS SO THEY ARE PROTECTED FROM DAMAGE TO SURFACE AND EDGES. MAINTAIN INTERIOR WORK ENVIRONMENT CLOSED IN, NOT EXPOSED TO WEATHER CLEAN, DRY, WELL–VENTILATED, WELL–LIGHTED, AND COMFORTABLE IN TEMPERATURE.
7. KEEP WORK OF TRADES SUCH AS CONDUIT, PIPE, AND DUCTS CLEAR OF THE INSIDE FACE OF WALL PANELS.

VTC

1. COLORS, TEXTURES AND PATTERNS WILL BE AS SELECTED BY THE OWNER FROM MANUFACTURER'S SAMPLES. DELIVERED TILE SHALL MATCH SAMPLES APPROVED BY THE OWNER.
2. KEEP WORK SURFACES AND WORKING ENVIRONMENT CLEAN, DRY, WELL–LIT, WELL–VENTILATED, FREE OF AIRBORNE CONSTRUCTION DUST AND AT A COMFORTABLE WORKING TEMPERATURE, MINIMUM OF 60 DEG. F.
3. PREPARE FLOORS FOR TILING SO THE FINISH FLOOR, WILL BE EITHER PERFECTLY LEVEL OR SLOPE PROPERLY TO DRAINS.
4. TILE MUST BE INSTALLED AS A COMPLETE, UNINTERRUPTED COVERING. EXTENDED TILE INTO RECESSES AND UNDER AND BEHIND FUTURE EQUIPMENT OR FIXTURES. TERMINATE TILE NEATLY AS EDGES, OBSTRUCTIONS, OR PENETRATIONS OF OTHER WORK.

CONTRACTOR SHALL FIELD VERIFY ALL EXISTING CONDITIONS AND DIMENSIONS PRIOR TO BID AND REPORT ANY DISCREPANCIES BACK TO OWNER. G.C. SHALL COORDINATE ALL SUB CONTRACTORS AND ENSURE A COMPLETE FULLY CODE COMPLIANT AND PROFESSIONALLY FINISHED TENANT SPACE.

ISSUED / REVISIONS:

ENGINEERING AND DESIGN PLLC
PO Box 213 (Mailing)
4236 HWY 3630
Annville, KY 40402
FIRM 23179
Phone (606)-364-2886
Fax (606)-364-5100
E-Mail: eric@emrengineers.com
Web Address: emrengineers.com

BIDDING QUESTIONS CONTACT 920-757-1486

PERSPIRE
SAUNA STUDIO

2450 SOUTH UNIVERSITY BLVD
SUITE D1
DENVER, CO 80210

CHECKED BY:	Staff
DRAWN BY:	Staff
DATE:	SEPTEMBER 12, 2023
SCALE:	PER PLAN
PROJECT No.:	PSS 2401

SHEET TITLE

SPECIFICATIONS

SHEET No.

1.14

AUTOMATIC LIGHTING CONTROL

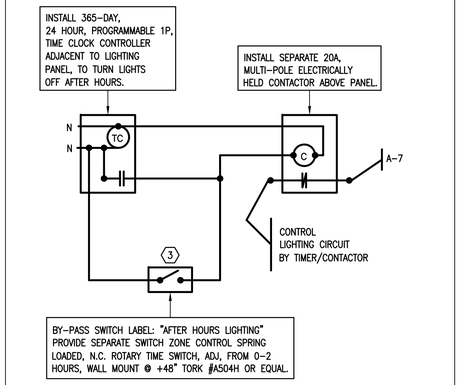

SHEET NOTES

1. E.C. COORDINATE ALL FINAL SIGNAGE LOCATIONS IN THE FIELD BASED ON PERMIT APPROVED SIGN DRAWING AND SHOP DRAWING SPEC AS APPROVED BY LANDLORD AND TENANT; DOCUMENTS TO BE PROVIDED BY EXTERIOR SIGNAGE CONTRACTOR.
   EXTERIOR SIGNAGE W/DISCONNECT ON BY PHOTOCELL AND OFF BY TIME CLOCK.
2. LIGHTED MIRROR OUTLET TO BE LOCATED WITHIN A RECESSED POWER MANAGEMENT BOX THAT CAN ALSO HOUSE A 3" X 5" TRANSFORMER. RECESSED BOX AND POWER TO BE CONCEALED BEHIND THE MIRROR ONCE INSTALLED. LIGHTED MIRROR OUTLET TO BE CONNECTED TO THE RESTROOM SWITCH. MOUNT AT 60" AFF.
3. PROVIDE 2 HOUR OVERRIDE FOR AFTER HOURS LIGHTING. PROVIDED AND INSTALLED BY E.C.
4. CEILING FLUSH MOUNTED SPEAKER (WHITE) FOR SONOS SYSTEM. TRIM FOR SPEAKER TO MATCH CEILING SURFACE. ROUTE SPEAKER WIRE FROM SPEAKERS BACK TO SONOS AND MAKE FINAL CONNECTIONS. OWNER WILL SUPPLY, E.C/G.C TO INSTALL. LOCATE SONOS ON SHELF HIGH ON PHONE BOARD. GC TO RUN SINGLE (2)WIRE 16 GAUGE SPEAKER WIRE FOR EACH SPEAKER. IF RUN IS OVER 80', GC TO RUN 14 GAUGE SPEAKER WIRE.

SP

LIGHT FIXTURE LEGEND

	TYPE	DESCRIPTION	MANUFACTURER	MODEL NO.	LAMPS
A	A	6" RECESSED CAN	LITHONIA	LDN6 35/15 L06WR LSS MVOLT EZ10 +11'-0" AFF IN GRID/GYP DAMP LOCATION FOR SHOWER ONLY	LED 13 WATTS DIMMABLE
B	B	4" RECESSED WALLWASH	HALO	H4571CTIE-ELG406-9-35-WH +11'-0" AFF	LED 13 WATTS DIMMABLE
C	C	24" DRUM LIGHT (13" HIGH)	VISUAL COMFORT AND COMPANY	65262-962-BN-FAUX SILK FABRIC SHADE 120-13H-24D +8'-11" AFF. INSTALL WITH (1) 12" MANUFACTURER SUPPLIED ROD.	LED 9.5 WATTS TYPE A19 97502S FROSTED 3000K DIMMABLE 4 X 9.5 = 38 WATTS
D	D	14" DRUM LIGHT	VISUAL COMFORT AND COMPANY	77262-962 SHADE: FAUX SILK FINISH: BRUSHED NICKEL (962) +7'-3" AFF	LED 9.5 WATTS TYPE A19 97502S FROSTED 3000K DIMMABLE 2 X 9.5 = 19 WATTS
E	E	WALL MIRROR (BACKLIT)	FCDADSON	CUSTOM +3'-2" AFF TO BOTTOM OF MIRROR	LED 20 WATTS
G	G	4" RECESSED CAN	LITHONIA	LDN4 35/15 L04 DOWNLIGHT WR LSS MVOLT EZ10 LED MOUNTED IN CEILING	LED 10 WATTS DIMMABLE
H	H	2'X4' LAYIN LED TROFFER	LITHONIA	2BLT4 2X4 BLT, 40L 4000, ADP EZ1, P835 82CRI 3500K (DIMMABLE)	34W LED
RH	RH	EXTERIOR REMOTE EMERGENCY HEAD	BEST	RHLED1-WP	INTEGRAL
WALL MOUNT ONLY EM	EM	EMERGENCY LIGHT WITH 90 MINUTE BATTERY BACKUP WALL MOUNTED 12" BELOW CEILING. MAX 108"AFF	BEST	LEDR1	INTEGRAL
EX/EM WALL MOUNT ONLY	EM	(1) COMBINATION EXIT / EMERGENCY LIGHT FIXTURE WITH 90 MINUTE BATTERY BACKUP	BEST	CXTEU2GWRC	INTEGRAL
EX WALL MOUNT ONLY	EX	EXIT LIGHT FIXTURE WITH 90 MINUTE BATTERY BACKUP	BEST	EX T E U 2 G W – EM	INTEGRAL

NOT ALL FIXTURES ARE NECESSARILY IN USE. LIGHT SWITCHES/CONTROLS TO BE MOUNTED AT 48" A.F.F. TO CENTER OF CONTROL.
LIGHT FIXTURES, OCCUPANCY SENSORS AND DIMMERS (ALL CONTROLS) SUPPLIED BY GC/EC.
WALL MIRROR BY FCD, INSTALLED BY GC/EC

GENERAL LIGHTING NOTES

1. ALL RECESSED LIGHTING FIXTURES SHALL BE RATED FOR CONTACT WITH INSULATION.
2. LIGHT SWITCHES/CONTROLS TO BE MOUNTED AT 48" AFF TO CENTER OF CONTROL.
3. LIGHTING SWITCHES INSTALLED IN TOILET ROOMS SHALL BE MOUNTED AT 40" AFF TO CENTER OF CONTROL . COORDINATE WITH ELEVATIONS. DO NOT INSTALL ACROSS DISSIMILAR FINISHES.
4. ALL SWITCHES, RECEPTACLES AND FACE PLATES TO BE WHITE FINISH. PROVIDED AND INSTALLED BY E.C.
5. ALL EMERGENCY AND EXIT BATTERY BACKUP LIGHTING, BATTERY TO BE INSTALLED AHEAD OF ALL CONTROL. INSTALL PER MANUFACTURER WIRING DIAGRAM.
6. E.C TO CLEARLY (MECHANICALLY) LABEL ALL SWITCHES FOR DEVICE SERVED.

SWITCH DESIGNATIONS

ALL CONTROLS RATED FOR 20 AMPS. ALL SWITCHED AND RECEPT TO BE WHITE

- $ STANDARD LIGHT SWITCH LUTRON CLARO
- 3$ 3 WAY LIGHT SWITCH LUTRON CLARO
- ◗ SLIDE DIMMER SWITCH LUTRON DIVA LED+ DIMMER SWITCH SWITCH FOR DIMMABLE LED SINGLE-POLE WHITE.
- 3◗ 3 WAY SLIDE DIMMER SWITCH LUTRON DIVA LED+ DIMMER SWITCH FOR DIMMABLE LED, 3-WAY, WHITE.
- ⋕ MUSIC VOLUME CONTROL TO MATCH LUTRON CLARO
- (OC) CEILING MOUNTED OCCUPANCY SENSOR CONTROL WITH INTEGRAL ADJUSTABLE TIMER. SET TO MAX 30 MINUTES.
- (M) OCCUPANCY / MOTION SENSOR CONTROL WITH INTEGNAL ADJUSTABLE TIMER. SET TO MAX 30 MINUTES.
- (R) CEILING MOUNTED DAY LIGHTING SENSOR CONTROL
- (T) ADJUSTABLE WALL TIMER, MAXIMUM 30 MINUTES

CONTROL WIRING

ELECTRICAL CONTRACTOR SHALL ENSURE RECEIPT OF CONTROL DEVICE WIRING SCHEMATICS FROM MANUFACTURER / SUPPLIER OF LIGHTING FIXTURES. E.C. SHALL BE RESPONSIBLE FOR ALL LOW VOLTAGE WIRING REQUIRED TO PROVIDE COMPLETE AND OPERABLE DIMMING / CONTROL SYSTEMS FOR ALL LIGHTING.

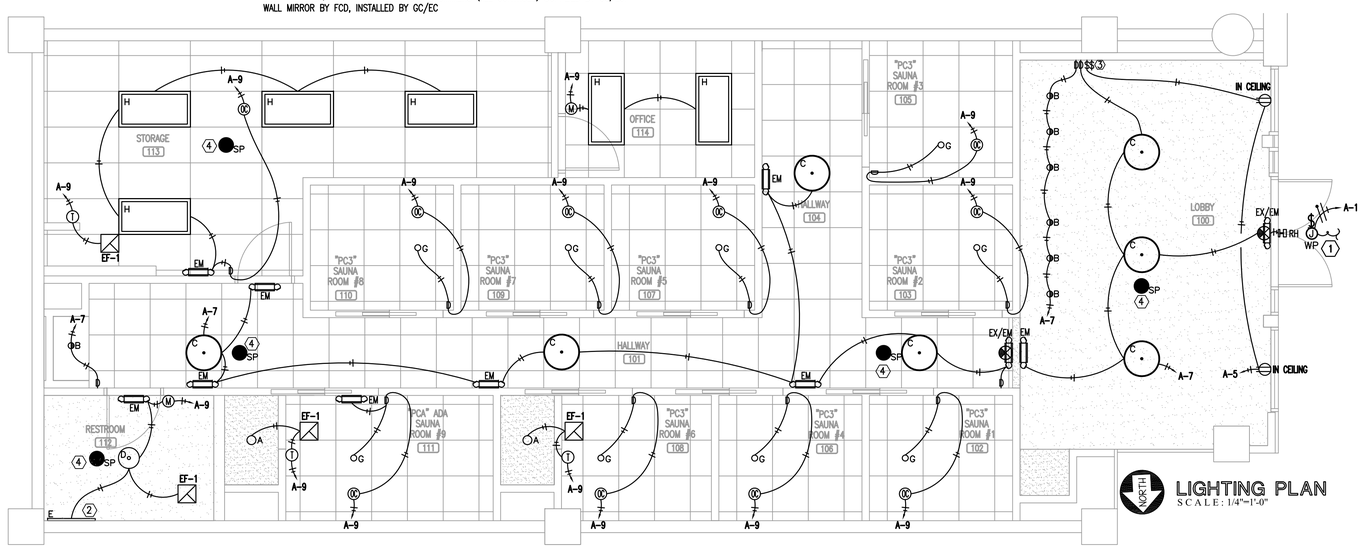

CONTRACTOR SHALL FIELD VERIFY ALL EXISTING CONDITIONS AND DIMENSIONS PRIOR TO BID AND REPORT ANY DISCREPANCIES BACK TO OWNER. G.C. SHALL COORDINATE ALL SUB CONTRACTORS AND ENSURE A COMPLETE FULLY CODE COMPLIANT AND PROFESSIONALLY FINISHED TENANT SPACE.

ISSUED / REVISIONS:

ENGINEERING AND DESIGN PLLC
PO Box 213 (Nelling)
4236 HWY 3650
Annville, KY 40402
Phone (606)-364-2886
Fax (606)-364-5100
E-Mail: eric@emrengineers.com
Web Address: emrengineers.com
FIRM 23179

COLORADO REGISTERED ERIC EVERETT 36557 PROFESSIONAL ENGINEER 9.13.23

BIDDING QUESTIONS CONTACT 920-757-1486

PERSPIRE SAUNA STUDIO

2450 SOUTH UNIVERSITY BLVD
SUITE D
DENVER, CO 80210

CHECKED BY:	Staff
DRAWN BY:	Staff
DATE:	SEPTEMBER 12, 2023
SCALE:	PER PLAN
PROJECT No.:	PSS 2401

SHEET TITLE

ELECTRICAL LIGHTING PLAN

SHEET No.

2.01

RETURN AIR PLENUM

MATERIALS WITHIN PLENUMS. EXCEPT AS REQUIRED BY SECTIONS 602.2.1.1 THROUGH 602.2.1.6, MATERIALS WITHIN PLENUMS SHALL BE NONCOMBUSTIBLE OR SHALL HAVE A FLAME SPREAD INDEX OF NOT MORE THAN 25 AND A SMOKE-DEVELOPED INDEX OF NOT MORE THAN 50 WHEN TESTED IN ACCORDANCE WITH ASTM E 84 ORUL 723.
EXCEPTIONS:
1. RIGID AND FLEXIBLE DUCTS AND CONNECTORS SHALL CONFORM TO SECTION 603.
2. DUCT COVERINGS, LININGS, TAPE AND CONNECTORS SHALL CONFORM TO SECTIONS 603 AND 604.
3. THIS SECTION SHALL NOT APPLY TO MATERIALS EXPOSED WITHIN PLENUMS IN ONE- AND TWO-FAMILY DWELLINGS.
4. THIS SECTION SHALL NOT APPLY TO SMOKE DETECTORS.
5. COMBUSTIBLE MATERIALS FULLY ENCLOSED WITHIN CONTINUOUS NONCOMBUSTIBLE RACEWAYS OR ENCLOSURES, APPROVED GYPSUM BOARD ASSEMBLIES OR WITHIN MATERIALS LISTED AND LABELED FOR SUCH APPLICATION.

602.2.1.1 WIRING. COMBUSTIBLE ELECTRICAL OR ELECTRONIC WIRING METHODS AND MATERIALS, OPTICAL FIBER CABLE, AND OPTICAL FIBER RACEWAY EXPOSED WITHIN APLENUM SHALL HAVE A PEAK OPTICAL DENSITY NOT GREATER THAN 0.50, AN AVERAGE OPTICAL DENSITY NOT GREATER THAN 0.15, AND A FLAME SPREAD NOT GREATER THAN 5 FEET (1524 MM) WHEN TESTED IN ACCORDANCE WITH NFPA 262. ONLY TYPE OFNP (PLENUM RATED NONCONDUCTIVE OPTICAL FIBER CABLE) SHALL BE INSTALLED IN PLENUM-RATED OPTICAL FIBER RACEWAYS. WIRING, CABLE, AND RACEWAYS ADDRESSED IN THIS SECTION SHALL BE LISTED AND LABELED AS PLENUM RATED AND SHALL BE INSTALLED IN ACCORDANCE WITH NFPA 70.

GC/EC/PC TO COORDINATE IN FIELD FOR INSTALLATION OF HEAT TAPE PROTECTION OF SANITARY SEWER AND DOMESTIC WATER PIPING BELOW TENANT FLOOR IN PARKING GARAGE. VERIFY IN FIELD. (1) 20 AMP CIRCUIT HAS BEEN PROVIDED IN ELECTRICAL LOAD AND PANEL SCHEDULES FINAL LOCATION TO BE COORDINATED IN FIELD.

SHEET NOTES

1. RECEPTACLE ABOVE CEILING FOR WIRELESS HUB. G.C./E.C. TO PROVIDE AND INSTALL ADDITIONAL SHELF ABOVE CEILING FOR HUB.
2. SAUNA RECEPTACLE AND SWITCH TO MOUNTED AT 90"AFF TO CENTER OF RECEPTACLE. INSTALL POWERTEC 7100B 110/220V SINGLE PHASE ON/OFF SWITCH OR EQUAL ADJACENT TO RECEPTACLE FOR CONTROL OF RECEPTACLE.
3. NOT USED.
4. SUPPLY AN EMPTY CONDUIT FROM THE PHONE BOARD TO UNDER THE POS COUNTER WITH PULL STRING AND BLANK FACE PLATE FOR FUTURE LOW VOLTAGE WORK, BY OTHERS.
5. ALL TV RECEPTACLES AND DATA OUTLETS TO BE RECESSED IN WALL. 2-GANG RECESSED TV MEDIA BOX KIT.
6. COORDINATE WITH MANUFACTURER INSTALL MANUAL FOR POWER TO WATER MACHINE. MOUNT REMOTE COOLER ABOVE CEILING.
7. NOT USED
8. GFCI RECEPTACLE AT 18" AFF BELOW SINK UNDER VANITY FOR FAUCET POWER.
9. 60" WIDE X 44" TALL 3/4" PLYWOOD PHONE BOARD PAINTED TO MATCH ADJACENT FINISH. INSTALL TOP OF PHONE BOARD TIGHT TO CEILING ABOVE. INSTALL QUAD RECEPTACLES BELOW PHONE BOARD AT 88" TO THE TOP OF RECEPTACLE (TOP OF RECEPTACLES AT THE BOTTOM OF PHONE BOARD).
10. ALL POWER AND DATA SHOULD BE STACKED 2 HIGH AT THE POS LOCATION. FINAL LOCATION TO BE COORDINATED WITH MILLWORK SHOP DRAWINGS.

TV MOUNT

G.C. TO PROVIDE FIRE TREATED BLOCKING FOR TV MOUNTS ACROSS 3 STUD BAYS.

COMMUNICATION WIRING

- ALL VOICE/DATA WIRING TO BE CAT 6 RATED. (MIN) 2 HOME RUN TO EACH, PHONE, DATA OR FAX.
- PATCH PANEL AND PHONE BLOCK BY VENDOR. INSTALLED BY EC.
- ALL WIRING TO BE CLEARLY MARKED ON BOTH ENDS WITH MACHINE PRINTED WIRE NUMBERS
- ALL VOICE / DATA JACKS TO BE CLEARLY LABELED WITH MACHINE PRINTED LABELS
- LOW VOLTAGE WIRING SHALL BE COLOR CODED PER INDUSTRY STANDARD
- TELEPHONE SYSTEM MUST BE CAPABLE OF 4 VOICE LINES AND A DEDICATED HIGH SPEED INTERNET CONNECTION.
- WIRING SHALL TERMINATE AT PHONE/ DATA BOARD
- G.C. SHALL BE RESPONSIBLE TO COMPLETE INSTALLATION OF COMMUNICATION SERVICES WITHIN SPACE.

GENERAL NOTES

1. BRANCH CIRCUIT WIRING SHALL BE AS FOLLOWS:
   A. LIGHTING AND POWER NETWORKS: (120/208V, 3ø, 4W)
      1) 100 FEET OR LESS:
         PHASE – 3#12 AWG
         NEUTRAL – 1#12 AWG
         GROUND – 1#12 AWG
      2) GREATER THAN 100 FEET:
         INCREASE ALL CONDUCTORS BY ONE WIRE GUAGE SIZE.
      3) TWO NETWORKS MAXIMUM PER CONDUIT.
2. PROVIDE SINGLE GANG JUNCTION BOX FOR EACH TELEPHONE LOCATION WITH 3/4" CONDUIT STUBBED TO 6" ABOVE CEILING EXTEND TELEPHONE FROM OUTLET TO TELEPHONE BOARD LOCATION PER PLAN.
3. MINIMUM CONDUIT SIZE SHALL BE 3/4", UNLESS OTHERWISE NOTED OR INDICATED.

ELECTRICAL SYMBOLS

	POWER PANELBOARD OR DISTRIBUTION PANEL 3/4" OIS FIRE TREATED PLYWOOD. PAINTED TO MATCH ADJACENT FINISH
RECEPTACLES & OUTLETS (MOUNT CENTER OF BOX AT 18" AFF U.N.O.)(ALL DIM NOTED TO CENTER OF BOX)	
	RECEPTACLE, 20A, 208V, SINGLE PHASE NEMA 6-20P WIRE GROUNDED TYPE (WHITE) FOR SAUNA VERIFY FINAL CONNECTION WITH MANUFACTURER INSTALLATION MANUAL.
	DUPLEX RECEPTACLE, 20A, 120V, 3 WIRE GROUNDED TYPE (WHITE)
	DOUBLE DUPLEX RECEPTACLE OUTLET, MTD., IN 2-GANG BOX W/SINGLE COVER PLATE (WHITE) ALL POWER IWTHIN 6'-0" OF WATER SOURCE TO BE GFCI RATED.
	GFCI DUPLEX RECEPTACLE, 20A, 120V, 3 WIRE GROUNDED TYPE (WHITE)
▼	COMMUNICATION – DUPLEX DATA (ETHERNET) JACK (2 RUNS) (RJ45) (CAT5E OR BETTER)
▽	COMMUNICATION – DUPLEX PHONE JACK (RJ45) (CAT5E OR BETTER)
▼	COMMUNICATION – PHONE / DATA OUTLET (WHITE) (2 SEPERATE RUNS) (RJ45) (CAT5E OR BETTER)
FIRE ALARM DEVICES	FIRE ALARM DIFFERED PERMIT SUBMITTAL BY LOCAL LICENSED SUB CONTRACTOR
SD	SMOKE DETECTOR
F	STROBE LIGHTS (12" BELOW CEILING)
	MANUAL PULL STATION (44" AFF)
	HORN / STROBE (12" BELOW CEILING)
SS	SUPERVISORY VALVE TAMPER SWITCH
WF	SPRINKLER FLOW SWITCH
SD	DUCT SMOKE DETECTOR
FAA	FIRE ALARM ANNUNCIATOR

G.C. TO COORDINATE WITH LANDLORD APPROVED FIRE ALARM SUBCONTRACTOR FOR DIFFERED FIRE ALARM SUBMITTAL.
FIRE TRON – KEVIN ALLYN
(800)575-TRON M: (832)982-4575D: (281)403-4213F: (281)499-3711

NOTE: ALL TV AND DATA OUTLETS ARE TO BE RECESSED.

CONTACT FCDADSON TO CONFIRM LOCATION REQUIRED FOR THE POS CABINET OUTLETS. BEHIND THE POS CABINET. AT THE WALL AND CONCEALED AND DATA PORTS TO BE TERMINATED EC/GC NOTE: POS CABINET OUTLETS

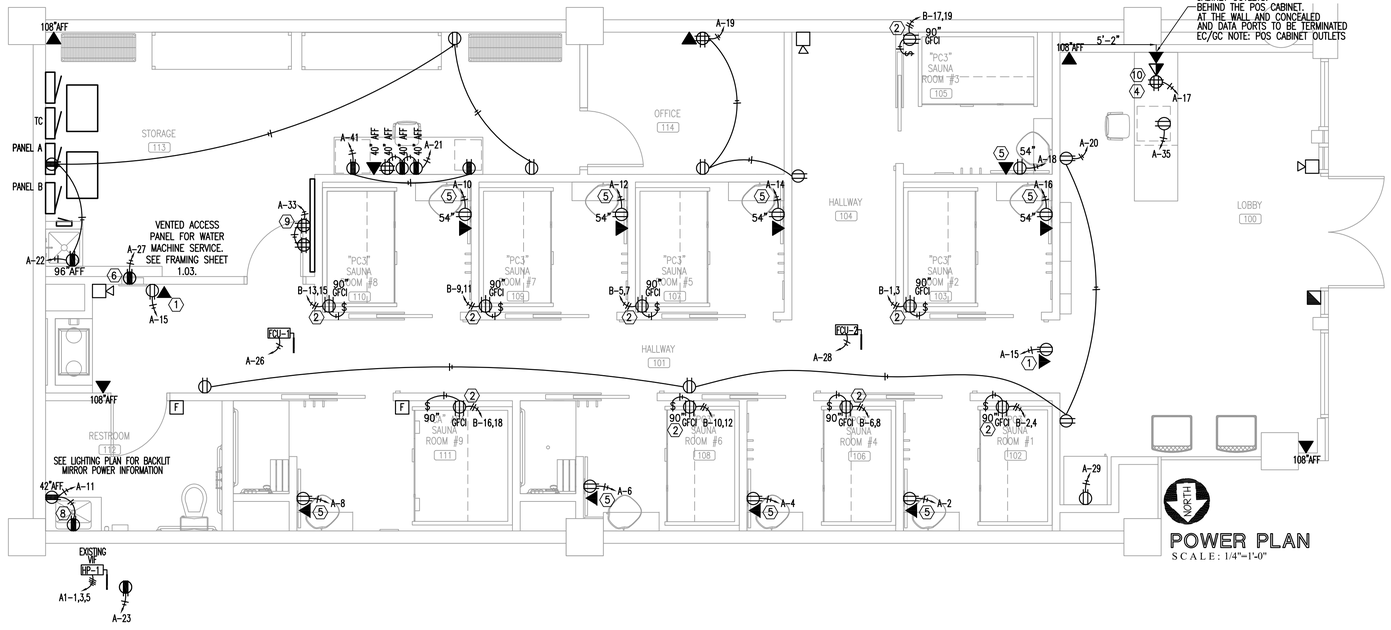

POWER PLAN

SCALE: 1/4"=1'-0"

ENGINEERING AND DESIGN PLLC
PO Box 213 (Kelling) 4236 HWY 3650 Annville, KY 40402
Phone (606)-364-2886
Fax (606)-364-5100
E-Mail: eric@emrengineers.com
Web Address: emrengineers.com
FIRM 23179

COLORADO REGISTERED PROFESSIONAL ENGINEER
ERIC EVERETT
36557
9.13.23
PROFESSIONAL ENGINEER

CONTRACTOR SHALL FIELD VERIFY ALL EXISTING CONDITIONS AND DIMENSIONS PRIOR TO BID AND REPORT ANY DISCREPANCIES BACK TO OWNER. G.C. SHALL COORDINATE ALL SUB CONTRACTORS AND ENSURE A COMPLETE FULLY CODE COMPLIANT AND PROFESSIONALLY FINISHED TENANT SPACE.

ISSUED / REVISIONS:

BIDDING QUESTIONS CONTACT 920-757-1466

PERSPIRE SAUNA STUDIO

2450 SOUTH UNIVERSITY BLVD
SUITE D
DENVER, CO 80210

CHECKED BY:	Staff
DRAWN BY:	Staff
DATE:	SEPTEMBER 12, 2023
SCALE:	PER PLAN
PROJECT No.:	PSS 2401

SHEET TITLE

ELECTRICAL POWER PLAN

SHEET No.

2.02

GENERAL NOTES

1. ALL ELECTRICAL WORK SHALL BE IN ACCORDANCE WITH THE LATEST ADOPTED EDITION OF THE NATIONAL ELECTRICAL CODE AND ALL APPLICABLE LOCAL AND STATE CODES.
2. ALL MATERIAL, EQUIPMENT AND APPLIANCES SHALL BE NEW AND SHALL CONFORM TO THE STANDARDS OF THE UNDERWRITER'S LABORATORIES, INC. AND THE NATIONAL MANUFACTURER'S ASSOCIATION.
3. ALL ELECTRICAL PERMITS AND INSPECTION FEES SHALL BE OBTAINED AND PAID FOR BY THE ELECTRICAL CONTRACTOR.
4. ELECTRICAL CONTRACT DRAWINGS ARE DIAGRAMMATIC AND INDICATE GENERAL ARRANGEMENT OF ELECTRICAL EQUIPMENT. DO NOT SCALE ELECTRICAL PLANS. OBTAIN ALL DIMENSIONS FROM THE ARCHITECT'S DIMENSIONED DRAWINGS AND FIELD MEASUREMENTS. THE CONTRACTOR SHALL REVIEW ARCHITECTURAL PLANS FOR DOOR SWINGS AND BUILT-IN EQUIPMENT; CONDITIONS INDICATED ON THOSE PLANS SHALL GOVERN FOR THIS WORK.
5. VERIFY ALL REQUIREMENTS AND COORDINATE EXACT LOCATION OF ELECTRICAL SERVICE WITH LOCAL POWER COMPANY PRIOR TO PROJECT START. NOTIFY ENGINEER OF ANY CHANGES.
6. ELECTRICAL CONTRACTOR SHALL GUARANTEE ALL WORK AND MATERIALS FOR ONE YEAR EFFECTIVE FROM CERTIFICATE OF OCCUPANCY.
7. A COMPLETE GROUNDING SYSTEM SHALL BE PROVIDED AND INSTALLED IN ACCORDANCE WITH ARTICLE 250 OF THE NEC, AND AS SHOWN ON THE DRAWINGS.
8. ALL CUTTING PATCHING REQUIRED FOR INSTALLATION OF ELECTRICAL EQUIPMENT SHALL BE THE RESPONSIBILITY OF THE ELECTRICAL CONTRACTOR. DO NOT CUT ANY MATERIAL THAT WILL WEAKEN THE STRUCTURE WITHOUT WRITTEN PERMISSION OF THE ARCHITECT. PATCHING SHALL BE ACCOMPLISHED TO MATCH ADJACENT SURFACES IN EVERY RESPECT. ENGAGE ORIGINAL INSTALLER FOR CUTTING/PATCHING OF ROOFS.
9. PROVIDE A TYPED DIRECTORY IN ALL PANELBOARDS CLEARLY DESCRIBING THE LOCATION AND TYPE OF LOAD SERVED FOR ALL CIRCUITS.
10. PROVIDE ENGRAVED PHENOLIC NAMEPLATES FOR ALL PANELBOARDS AND DISCONNECT SWITCHES, WHITE LETTERS ON BLACK BACKGROUND. NAMEPLATE SHALL CONTAIN EQUIPMENT DESIGNATION, VOLTAGE, FEEDER SOURCE & DATE.
11. PROVIDE "FLASH HAZARD" LABELS FOR ALL PANELBOARDS IN ACCORDANCE WITH NEC REQUIREMENTS.
12. ALL TERMINALS/LUGS SHALL BE 60 DEGREES/75 DEGREE RATED.
13. FUSES 0-600 AMPS SHALL BE UL CLASS "RK-5" LOW PEAK DUAL ELEMENTS TIME DELAY WITH 200,000 AMPERE INTERRUPTING RATING AS MANUFACTURED BY BUSSMAN UNLESS NOTED OTHERWISE.
14. ALL WATER HEATERS SHALL HAVE DISCONNECT SIZED PER 422.22(E)(3).
15. ELECTRICAL CONTRACTOR SHALL MAKE ALL FINAL ELECTRICAL CONNECTIONS TO EQUIPMENT REGARDLESS OF WHO SUPPLIES THE EQUIPMENT. THIS INCLUDES ALL HVAC, PLUMBING AND OWNER FURNISHED EQUIPMENT CONNECTIONS OF 120V OR HIGHER.
16. RACEWAYS SHALL BE INSTALLED CONCEALED IN NEW WALL CONSTRUCTION, ABOVE CEILINGS, BELOW FLOOR AND IN OTHER CAVITIES TO THE GREATEST EXTENT POSSIBLE. WHERE EXPOSED RACEWAYS MUST BE USED, LAYOUT RACEWAYS TO MINIMIZE THE NUMBER OF VERTICAL RUNS.
17. ALL EXPOSED RACEWAYS SHALL BE RUN PARALLEL TO THE BUILDING SURFACES AND SHALL BE PAINTED AS DIRECTED BY THE ARCHITECT. NO EXPOSED CONDUIT SHALL BE ALLOWED IN FINISHED SPACES EXCEPT AS PERMITTED BY THE OWNER OR ARCHITECT. EXPOSED RACEWAY IN FINISHED SPACES SHALL BE WIREMOLD TYPE.
18. BEFORE COMMENCING WITH ANY ROUGH-IN, COORDINATE THE EXACT LOCATION AND MOUNTING HEIGHT OF ALL WALL MOUNTED DEVICES WITH THE ARCHITECTURAL INTERIOR ELEVATIONS, CASEWORK, SHOP DRAWINGS, AND EXISTING CONDITIONS. IF ANY DISCREPANCIES ARE DISCOVERED, NOTIFY THE ARCHITECT FOR FURTHER DIRECTION. MINOR ADJUSTMENTS IN DEVICE LOCATION, 1. 5'-0" IN ANY DIRECTION SHALL BE DONE AT NO ADDITIONAL COST TO THE CONTRACT.
19. ALL WIRING SHALL BE INSTALLED IN IMC, RMC, EMT OR TYPE AC FLEXIBLE CABLE. RNC CONDUIT (PVC) SHALL ONLY BE USED UNDERGROUND AND OUTDOORS, WHERE NOT SUBJECT TO PHYSICAL DAMAGE. MINIMUM SIZE CONDUIT SHALL BE 3/4". AC FLEXIBLE CABLE SHALL BE USED ONLY IN AREAS PERMITTED BY CODE.
20. ALL FLEX SHALL BE LIQUID TIGHT FLEXIBLE METAL.
21. PROVIDE A PULL WIRE OR FISH TAPE IN ALL EMPTY CONDUITS. PROVIDE A BLANK COVER PLATE OVER ALL UNUSED BOXES INCLUDING DATA/COMM BOXES.
22. WHERE A SINGLE HOMERUN IS SHOWN THE CIRCUIT SHALL BE INSTALLED IN A DEDICATED CONDUIT, DO NOT COMBINE WITH OTHER CIRCUITS. WHERE A CIRCUIT HOMERUN IS NOT SHOWN THE CONTRACTOR SHALL COMBINE CIRCUITS, WHERE A CIRCUIT HOMERUN IS NOT SHOWN THE CONTRACTOR SHALL COMBINE CIRCUITS AS FOLLOWS AND IN ACCORDANCE WITH THE NEC:
    A MAXIMUM OF THREE 20A., 1POLE BRANCH CIRCUITS MAY BE COMBINED IN A COMMON HOMERUN SHARING A COMMON NEUTRAL OR WITH SEPARATE NEUTRALS, FOR A TOTAL OF SIX CURRENT CARRYING CONDUCTORS. ALL BRANCH CIRCUITS LARGER THAN 20A. SHALL BE SEPARATE HOMERUN TO PANEL.
23. CONDUCTORS SHALL BE COPPER, RATED AT NO LESS THE 600 VOLTS. MINIMUM SIZE SHALL BE NO. 12 AWG UNLESS OTHERWISE NOTED ON THE DRAWINGS. ALL WIRE #8 AWG AND LARGER SHALL BE STRANDED, #10 THRU #12 AWG CONDUCTORS SHALL BE SOLID. ALL INSULATION TYPES SHALL BE THWN OR THHN.
24. 20A/120V BRANCH CIRCUITS EXCEEDING 100' IN LENGTH FROM PANEL TO FARTHEST DEVICE SHALL USE NO. 10 CONDUCTORS AND 3/4"C.
25. FOR EVERY WORKING DEVICE MARK THE BRANCH CIRCUIT TO WHICH IT IS CONNECTED ON THE BACK OF EACH DEVICE PLATE, USING AN INDELIBLE MARKER PEN.
26. NOT USED.
27. EXACT LOCATION OF ALL FLOOR-MOUNTED OUTLETS SHALL BE COORDINATED WITH THE ARCHITECT BEFORE ROUGH-IN.
28. TWO OR MORE ADJACENT POWER OR COMMUNICATION RECEPTACLES SHALL BE GANGED WITH A COMMON FACE PLATE - IF THEY CAN NOT BE GANGED THEY SHALL BE INSTALLED WITH A MINIMUM DISTANCE BETWEEN UNITS.
29. WALL RECEPTACLES SHOWN BACK TO BACK MAY BE OFFSET BUT SHALL BE INSTALLED DIRECTLY ADJACENT TO ONE ANOTHER.
30. LIGHT SWITCHES SHALL BE NO MORE THAN 6" FROM EDGE OF DOOR FRAME.
31. WHERE PENETRATIONS ARE MADE THROUGH A REQUIRED FIRE-RESISTIVE WALL, OR PARTITION FOR THE PURPOSE OF RUNNING RACEWAY CARRYING ELECTRICAL, TELEPHONE, TELEVISION, OR LOCAL COMMUNICATION AND/OR SIGNALING CIRCUITS, THE OPENING AROUND THE RACEWAY SHALL BE FIRE STOPPED PER THE STATE BUILDING CODE. COORDINATION WITH THE GENERAL CONTRACTOR SHALL BE MAINTAINED TO INSURE THAT THIS FIRE STOPPING IS ACCOMPLISHED. USE APPROVED ASSEMBLIES SUCH AS THE FOLLOWING:
    * CONDUIT PENETRATIONS OF 1,2,3, & 4 HOUR GYP BOARD WALLS - U.L.#WL1001
    * CONDUIT PENETRATIONS OF 2,3, & 4 HOUR CONCRETE OR BLOCK WALLS - U.L.#CAJ1001
    * CONDUIT PENETRATIONS OD 2,3,& 4 HOUR CONCRETE FLOORS - U.L.#CAJ1001
    * CONDUIT PENETRATIONS OF 1 HOUR GYP BOARD CEILING ASSEMBLY - L526
    * MULT. CONDUIT PENETRATIONS OF 2,3,& 4 HOUR CONCRETE OR BLOCK WALL OR FLOOR - CAJ1042
32. IN REQUIRED FIRE RATED WALLS AND PARTITIONS, OPENINGS FOR INSTALLATION OF OF BOXES THAT ARE GREATER THAN 16 SQUARE INCHES SHALL BE PROTECTED AS REQUIRED BY U.L. COORDINATE CLOSELY WITH THE GENERAL CONTRACTOR TO INSURE THAT THE INTEGRITY OF THE U.L. RATING IS MAINTAINED.
33. OUTLET BOXES FOR DEVICES MOUNTED ON OPPOSITE SIDES OF FIRE RATED PARTITIONS SHALL NOT BE MOUNTED IN THE SAME WALL CAVITY. SEPARATED WALL PENETRATIONS BY MOUNTING ON OPPOSITE SIDES OF WALL STUDS OR OTHER VERTICAL STRUCTURAL MEMBERS IN THE WALL.
34. (SEISMIC REQUIREMENTS) ELECTRICAL EQUIPMENT SHALL MEET THE REQUIREMENTS OF SECTION 1621 OF THE 2002 IBC.
35. ELECTRICAL CONTRACTOR SHALL VERIFY THAT ALL AREAS IN WHICH FOOD IS PREPARED, OR IN WHICH UTENSILS ARE WASHED, SHALL BE PROVIDED WITH AT LEAST 50FC OF LIGHT ON FOOD PREPARATION WORK LEVELS AND AT UTENSILS WASHING WORK LEVELS. AT LEAST 10FC OF LIGHT AT 30 INCHES ABOVE THE FLOOR SHALL BE PROVIDED IN ALL OTHER WORK AREAS, INCLUDING STORAGE ROOMS AND WALK-IN UNITS. LIGHT BULBS IN FOOD PREPARATION, STORAGE, AND DISPLAY AREAS SHALL BE SHATTERPROOF OR SHIELDED SO AS TO PROTECT AGAINST BREAKAGE BY A SHIELD SURROUNDING AND EXTENDING BEYOND THE BUILD, LEAVING ONLY THE FACE OF THE BULB EXPOSED.

CODE LOAD ANALYSIS PER N.E.C.

CODE LOAD ANALYSIS PANEL A1

LOAD DESCRIPTION	CONNECTED KVA	DEMAND FACTOR	KVA DEMAND
LIGHTING - EXTERIOR	0	125%	0
LIGHTING - INTERIOR	1434	125%	1793
SIGNAGE	1200	125%	1500
RECEPTACLES	10000	FIRST 10 KW 100%	10000
	5960	REMAINDER @ 50%	2980
KITCHEN EQUIPMENT	0	65%	0
WATER HEATING	0	125%	0
HVAC EQUIPMENT	14754	100%	14754
		LGT MOTOR @25%	0
SAUNAS	33250	100%	33250
MISC.	0	100%	0
TOTALS	66598		64277
CALCULATED SERVICE DEMAND AMPERES			77 amps

CODE LOAD ANALYSIS PER N.E.C.

CODE LOAD ANALYSIS PANEL A

LOAD DESCRIPTION	CONNECTED KVA	DEMAND FACTOR	KVA DEMAND
LIGHTING - EXTERIOR	0	125%	0
LIGHTING - INTERIOR	1434	125%	1793
SIGNAGE	1200	125%	1500
RECEPTACLES	10000	FIRST 10 KW 100%	10000
	5960	REMAINDER @ 50%	2980
KITCHEN EQUIPMENT	0	65%	0
WATER HEATING	0	125%	0
HVAC EQUIPMENT	2784	100%	2784
		LGT MOTOR @25%	750
SAUNAS	0	100%	0
MISC.	0	100%	0
TOTALS	21378		17947
CALCULATED SERVICE DEMAND AMPERES			50 amps

CODE LOAD ANALYSIS PER N.E.C.

CODE LOAD ANALYSIS PANEL B

LOAD DESCRIPTION	CONNECTED KVA	DEMAND FACTOR	KVA DEMAND
LIGHTING - EXTERIOR	0	125%	0
LIGHTING - INTERIOR	0	125%	0
SIGNAGE	0	125%	0
RECEPTACLES	0	FIRST 10 KW 100%	0
	0	REMAINDER @ 50%	0
KITCHEN EQUIPMENT	0	65%	0
WATER HEATING	0	125%	0
HVAC EQUIPMENT	0	100%	0
		LGT MOTOR @25%	0
SAUNAS	33250	100%	33250
MISC.	0	100%	0
TOTALS	33250		33250
CALCULATED SERVICE DEMAND AMPERES			92 amps

ELECTRICAL PANEL SCHEDULE A1

EXISITING SURFACE MOUNTED NEMA 1 | 100 AMP MAIN BREAKER | 277 / 480 / 3Ø / 4WIRE | 42,000 AIC (VIF)

CIRCUIT BREAKER	TYPE	WIRE AND CONDUIT	LOAD SERVED	CIRCUIT NUMBER	LOAD WATTS ØA	LOAD WATTS ØB	LOAD WATTS ØC	CIRCUIT NUMBER	LOAD SERVED	WIRE AND CONDUIT	TYPE	CIRCUIT BREAKER
20A 3P	HACR	4-#12 THHN & 1# 12 G, 3/4" C.	HP-1	1	3990			2				50A 3P
				3	7405	3990						
				5		6953	3990	4	EXISTING 30 KVA TRNAFORMER	4 #3 THHN & 1 #3 G., 3/4"C.		
			SPACE	7	0		7020	6				
			SPACE	9	10980	0		8				70A 3P
			SPACE	11		11135	0	10	NEW 45 KVA TRNAFORMER	4 #4 THHN & 1 #8 G., 1"C.		
							11135	12				
					22375	22078	22145	TOTAL CONNECTED LOAD WATTS		66598		
PROVIDE WITH GROUNDED BUS								TOTAL LOAD KVA / AMPS		66.6		80.1

ELECTRICAL PANEL SCHEDULE A

EXISITING SURFACE MOUNTED NEMA 1 | 100 AMP MAIN CIRCUIT BREAKER | 120 / 208 / 3Ø / 4WIRE | 22,000 AIC (VIF)

CIRCUIT BREAKER	TYPE	WIRE AND CONDUIT	LOAD SERVED	CIRCUIT NUMBER	LOAD WATTS ØA	LOAD WATTS ØB	LOAD WATTS ØC	CIRCUIT NUMBER	LOAD SERVED	WIRE AND CONDUIT	TYPE	CIRCUIT BREAKER
20A / 1P	TC	2-#12 THHN & 1# 12 G, 3/4" C.	EXTERIOR SIGNAGE	1	1200							
20A / 1P		2-#12 THHN & 1# 12 G, 3/4" C.	TIME CLOCK CONTROLLER	3	720	180		2	SAUNA ROOM 102 CONVENIENCE RECEPTACLES	2-#12 THHN & 1# 12 G, 3/4" C.		20A / 1P
20A / 1P		2-#12 THHN & 1# 12 G, 3/4" C.	STOREFRONT RECEPTACLES	5		720	1800	4	SAUNA ROOM 106 CONVENIENCE RECEPTACLES	2-#12 THHN & 1# 12 G, 3/4" C.		20A / 1P
20A / 1P		2-#12 THHN & 1# 12 G, 3/4" C.	LIGHTING	7	397		720	6	SAUNA ROOM 108 CONVENIENCE RECEPTACLES	2-#12 THHN & 1# 12 G, 3/4" C.		20A / 1P
20A / 1P		2-#12 THHN & 1# 12 G, 3/4" C.	LIGHTING	9	720	1037		8	SAUNA ROOM 111 CONVENIENCE RECEPTACLES	2-#12 THHN & 1# 12 G, 3/4" C.		20A / 1P
20A / 1P		2-#12 THHN & 1# 12 G, 3/4" C.	RESTROOM 112 RECEPTACLES	11		720	360	10	SAUNA ROOM 110 CONVENIENCE RECEPTACLES	2-#12 THHN & 1# 12 G, 3/4" C.		20A / 1P
			SPACE	13	0		720	12	SAUNA ROOM 109 CONVENIENCE RECEPTACLES	2-#12 THHN & 1# 12 G, 3/4" C.		20A / 1P
20A / 1P	IG	2-#12 THHN & 1# 12 G, 3/4" C.	WIFI ROUTER	15	720	360		14	SAUNA ROOM 107 CONVENIENCE RECEPTACLES	2-#12 THHN & 1# 12 G, 3/4" C.		20A / 1P
20A / 1P	IG	2-#12 THHN & 1# 12 G, 3/4" C.	POS RECEPTACLES	17		720	540	16	SAUNA ROOM 103 CONVENIENCE RECEPTACLES	2-#12 THHN & 1# 12 G, 3/4" C.		20A / 1P
20A / 1P		2-#12 THHN & 1# 12 G, 3/4" C.	CONVENIENCE RECEPTALES	19	720		720	18	SAUNA ROOM 105 CONVENIENCE RECEPTACLES	2-#12 THHN & 1# 12 G, 3/4" C.		20A / 1P
20A / 1P	IG	2-#12 THHN & 1# 12 G, 3/4" C.	STORAGE 113 DESK RECEPTACLES	21	720	720		20	CONVENIENCE RECEPTACLES	2-#12 THHN & 1# 12 G, 3/4" C.		20A / 1P
20A / 1P		2-#12 THHN & 1# 12 G, 3/4" C.	HVAC SERVICE RECEPTACLES	23		720	360	22	CONVENIENCE RECEPTACLES	2-#12 THHN & 1# 12 G, 3/4" C.		20A / 1P
			SPACE	25	0		0	24	SPACE			
20A / 1P	GFCI	2-#12 THHN & 1# 12 G, 3/4" C.	WATER MACHINE	27	408	480		26	FCU-1 4 TON	2-#12 THHN & 1# 12 G, 3/4" C.	HACR	20A / 1P
20A / 1P		2-#12 THHN & 1# 12 G, 3/4" C.	LOBBY FRIDGE	29		576	720	28	FCU-2 6 TON	2-#12 THHN & 1# 12 G, 3/4" C.	HACR	20A / 1P
			SPACE	31	0		0	30	SPACE			
20A / 1P	IG LOD	2-#12 THHN & 1# 12 G, 3/4" C.	PHONE EQUIPMENT	33	0	720		32	SPACE			
20A / 1P		2-#12 THHN & 1# 12 G, 3/4" C.	LOBBY FRIDGE	35		0	360	34	SPACE			
20A / 1P	HACR	2-#12 THHN & 1# 12 G, 3/4" C.	HEAT TAPE	37	1800		0	36	SPACE			
			SPACE	39	0	0		38	SPACE			
20A / 1P		2-#12 THHN & 1# 12 G, 3/4" C.	STORAGE ROOM 113 FRIDGE	41		0	720	40	SPACE			
							0	42	SPACE			
					7405	6953	7020	TOTAL CONNECTED LOAD WATTS		21378		
PROVIDE WITH GROUNDED BUS								TOTAL LOAD KVA / AMPS		21.4		59.4

ELECTRICAL PANEL SCHEDULE B

NEW SURFACE MOUNTED NEMA 1 | 125 AMP MAIN BREAKER | 120 / 208 / 3Ø / 4WIRE | 22,000 AIC (VIF)

CIRCUIT BREAKER	TYPE	WIRE AND CONDUIT	LOAD SERVED	CIRCUIT NUMBER	LOAD WATTS ØA	LOAD WATTS ØB	LOAD WATTS ØC	CIRCUIT NUMBER	LOAD SERVED	WIRE AND CONDUIT	TYPE	CIRCUIT BREAKER
20A 2P	HACR	3-#12 THHN & 1# 12 G, 3/4" C.	SAUNA RM 103	1	1830							
				3	1830	1830		2	SAUNA RM 102	3-#12 THHN & 1# 12 G, 3/4" C.	HACR	20A 2P
20A 2P	HACR	3-#12 THHN & 1# 12 G, 3/4" C.	SAUNA RM 107	5		1830	1830	4				
				7	1830		1830	6	SAUNA RM 106	3-#12 THHN & 1# 12 G, 3/4" C.	HACR	20A 2P
20A 2P	HACR	3-#12 THHN & 1# 12 G, 3/4" C.	SAUNA RM 109	9	1830	1830		8				
				11		1830	1830	10	SAUNA RM 108	3-#12 THHN & 1# 12 G, 3/4" C.	HACR	20A 2P
20A 2P	HACR	3-#12 THHN & 1# 12 G, 3/4" C.	SAUNA RM 110	13	1830		1830	12				
				15	0	1830		14	SPACE			
20A 2P	HACR	3-#12 THHN & 1# 12 G, 3/4" C.	SAUNA RM 105	17		1985	1830	16	SAUNA RM 111	3-#8 THHN & 1# 8 G, 3/4" C.	HACR	30A 2P
				19	1830		1985	18				
			SPACE	21	0	0		20	SPACE			
			SPACE	23		0	0	22	SPACE			
			SPACE	25	0		0	24	SPACE			
			SPACE	27	0	0		26	SPACE			
			SPACE	29		0	0	28	SPACE			
			SPACE	31	0		0	30	SPACE			
			SPACE	33	0	0		32	SPACE			
			SPACE	35		0	0	34	SPACE			
			SPACE	37	0		0	36	SPACE			
			SPACE	39	0	0		38	SPACE			
			SPACE	41		0	0	40	SPACE			
							0	42	SPACE			
					10980	11135	11135	TOTAL CONNECTED LOAD WATTS		33250		
PROVIDE WITH GROUNDED BUS								TOTAL LOAD KVA / AMPS		33.3		92.4

CONTRACTOR SHALL FIELD VERIFY ALL EXISTING CONDITIONS AND DIMENSIONS PRIOR TO BID AND REPORT ANY DISCREPANCIES BACK TO OWNER. G.C. SHALL COORDINATE ALL SUB CONTRACTORS AND ENSURE A COMPLETE FULLY CODE COMPLIANT AND PROFESSIONALLY FINISHED TENANT SPACE.

ISSUED / REVISIONS:

ENGINEERING AND DESIGN PLLC
PO Box 213 (Welling)
4236 HWY 3650
Annville, KY 40402
Phone (606)-364-2886
Fax (606)-364-5100
E-Mail: eric@emrengineers.com
Web Address: emrengineers.com
FIRM 23179

COLORADO REGISTERED PE ENGINEER 36557 9.13.23 PROFESSIONAL ENGINEER

PERSPIRE SAUNA STUDIO

2450 SOUTH UNIVERSITY BLVD
SUITE 101
DENVER, CO 80210

BIDDING QUESTIONS CONTACT 920-757-1486

CHECKED BY:	Staff
DRAWN BY:	Staff
DATE:	SEPTEMBER 12, 2023
SCALE:	PER PLAN
PROJECT No.:	PSS 2401

SHEET TITLE

ELECTRICAL PANELS

SHEET No.

2.03

GENERAL NOTES

1. ALL ELECTRICAL WORK SHALL BE IN ACCORDANCE WITH THE LATEST ADOPTED EDITION OF THE NATIONAL ELECTRICAL CODE AND ALL APPLICABLE LOCAL AND STATE CODES.
2. ALL MATERIAL, EQUIPMENT AND APPLIANCES SHALL BE NEW AND SHALL CONFORM TO THE STANDARDS OF THE UNDERWRITER'S LABORATORIES, INC. AND THE NATIONAL MANUFACTURER'S ASSOCIATION.
3. ALL ELECTRICAL PERMITS AND INSPECTION FEES SHALL BE OBTAINED AND PAID FOR BY THE ELECTRICAL CONTRACTOR.
4. ELECTRICAL CONTRACT DRAWINGS ARE DIAGRAMMATIC AND INDICATE GENERAL ARRANGEMENT OF ELECTRICAL EQUIPMENT. DO NOT SCALE ELECTRICAL PLANS. OBTAIN ALL DIMENSIONS FROM THE ARCHITECT'S DIMENSIONED DRAWINGS AND FIELD MEASUREMENTS. THE CONTRACTOR SHALL REVIEW ARCHITECTURAL PLANS FOR DOOR SWINGS AND BUILT-IN EQUIPMENT; CONDITIONS INDICATED ON THOSE PLANS SHALL GOVERN FOR THIS WORK.
5. VERIFY ALL REQUIREMENTS AND COORDINATE EXACT LOCATION OF ELECTRICAL SERVICE WITH LOCAL POWER COMPANY PRIOR TO PROJECT START. NOTIFY ENGINEER OF ANY CHANGES.
6. ELECTRICAL CONTRACTOR SHALL GUARANTEE ALL WORK AND MATERIALS FOR ONE YEAR EFFECTIVE FROM CERTIFICATE OF OCCUPANCY.
7. A COMPLETE GROUNDING SYSTEM SHALL BE PROVIDED AND INSTALLED IN ACCORDANCE WITH ARTICLE 250 OF THE NEC, AND AS SHOWN ON THE DRAWINGS.
8. ALL CUTTING PATCHING REQUIRED FOR INSTALLATION OF ELECTRICAL EQUIPMENT SHALL BE THE RESPONSIBILITY OF THE ELECTRICAL CONTRACTOR. DO NOT CUT ANY MATERIAL THAT WILL WEAKEN THE STRUCTURE WITHOUT WRITTEN PERMISSION OF THE ARCHITECT. PATCHING SHALL BE ACCOMPLISHED TO MATCH ADJACENT SURFACES IN EVERY RESPECT. ENGAGE ORIGINAL INSTALLER FOR CUTTING/PATCHING OF ROOFS.
9. PROVIDE A TYPED DIRECTORY IN ALL PANELBOARDS CLEARLY DESCRIBING THE LOCATION AND TYPE OF LOAD SERVED FOR ALL CIRCUITS.
10. PROVIDE ENGRAVED PHENOLIC NAMEPLATES FOR ALL PANELBOARDS AND DISCONNECT SWITCHES, WHITE LETTERS ON BLACK BACKGROUND. NAMEPLATE SHALL CONTAIN EQUIPMENT DESIGNATION, VOLTAGE, FEEDER SOURCE & DATE.
11. PROVIDE "FLASH HAZARD" LABELS FOR ALL PANELBOARDS IN ACCORDANCE WITH NEC REQUIREMENTS.
12. ALL TERMINALS/LUGS SHALL BE 60 DEGREES/75 DEGREE RATED.
13. FUSES 0-600 AMPS SHALL BE UL CLASS "RK-5" LOW PEAK DUAL ELEMENTS TIME DELAY WITH 200,000 AMPERE INTERRUPTING RATING AS MANUFACTURED BY BUSSMAN UNLESS NOTED OTHERWISE.
14. ALL WATER HEATERS SHALL HAVE DISCONNECT SIZED PER 422.22(E)(3).
15. ELECTRICAL CONTRACTOR SHALL MAKE ALL FINAL ELECTRICAL CONNECTIONS TO EQUIPMENT REGARDLESS OF WHO SUPPLIES THE EQUIPMENT. THIS INCLUDES ALL HVAC, PLUMBING AND OWNER FURNISHED EQUIPMENT CONNECTIONS OF 120V OR HIGHER.
16. RACEWAYS SHALL BE INSTALLED CONCEALED IN NEW WALL CONSTRUCTION, ABOVE CEILINGS, BELOW FLOOR AND IN OTHER CAVITIES TO THE GREATEST EXTENT POSSIBLE. WHERE EXPOSED RACEWAYS MUST BE USED, LAYOUT RACEWAYS TO MINIMIZE THE NUMBER OF VERTICAL RUNS.
17. ALL EXPOSED RACEWAYS SHALL BE RUN PARALLEL TO THE BUILDING SURFACES AND SHALL BE PAINTED AS DIRECTED BY THE ARCHITECT. NO EXPOSED CONDUIT SHALL BE ALLOWED IN FINISHED SPACES EXCEPT AS PERMITTED BY THE OWNER OR ARCHITECT. EXPOSED RACEWAY IN FINISHED SPACES SHALL BE WIREMOLD TYPE.
18. BEFORE COMMENCING WITH ANY ROUGH-IN, COORDINATE THE EXACT LOCATION AND MOUNTING HEIGHT OF ALL WALL MOUNTED DEVICES WITH THE ARCHITECTURAL INTERIOR ELEVATIONS, CASEWORK, SHOP DRAWINGS, AND EXISTING CONDITIONS. IF ANY DISCREPANCIES ARE DISCOVERED, NOTIFY THE ARCHITECT FOR FURTHER DIRECTION. MINOR ADJUSTMENTS IN DEVICE LOCATION, I. 5'-0" IN ANY DIRECTION SHALL BE DONE AT NO ADDITIONAL COST TO THE CONTRACT.
19. ALL WIRING SHALL BE INSTALLED IN IMC, RMC, EMT OR TYPE AC FLEXIBLE CABLE. RNC CONDUIT (PVC) SHALL ONLY BE USED UNDERGROUND AND OUTDOORS, WHERE NOT SUBJECT TO PHYSICAL DAMAGE. MINIMUM SIZE CONDUIT SHALL BE 3/4". AC FLEXIBLE CABLE SHALL BE USED ONLY IN AREAS PERMITTED BY CODE.
20. ALL FLEX SHALL BE LIQUID TIGHT FLEXIBLE METAL.
21. PROVIDE A PULL WIRE OR FISH TAPE IN ALL EMPTY CONDUITS. PROVIDE A BLANK COVER PLATE OVER ALL UNUSED BOXES INCLUDING DATA/COMM BOXES.
22. WHERE A SINGLE HOMERUN IS SHOWN THE CIRCUIT SHALL BE INSTALLED IN A DEDICATED CONDUIT, DO NOT COMBINE WITH OTHER CIRCUITS. WHERE A CIRCUIT HOMERUN IS NOT SHOWN THE CONTRACTOR SHALL COMBINE CIRCUITS, WHERE A CIRCUIT HOMERUN IS NOT SHOWN THE CONTRACTOR SHALL COMBINE CIRCUITS AS FOLLOWS AND IN ACCORDANCE WITH THE NEC:
    A MAXIMUM OF THREE 20A., 1POLE BRANCH CIRCUITS MAY BE COMBINED IN A COMMON HOMERUN SHARING A COMMON NEUTRAL OR WITH SEPARATE NEUTRALS, FOR A TOTAL OF SIX CURRENT CARRYING CONDUCTORS. ALL BRANCH CIRCUITS LARGER THAN 20A. SHALL BE SEPARATE HOMERUN TO PANEL.
23. CONDUCTORS SHALL BE COPPER, RATED AT NO LESS THE 600 VOLTS. MINIMUM SIZE SHALL BE NO. 12 AWG UNLESS OTHERWISE NOTED ON THE DRAWINGS. ALL WIRE #8 AWG AND LARGER SHALL BE STRANDED, #10 THRU #12 AWG CONDUCTORS SHALL BE SOLID. ALL INSULATION TYPES SHALL BE THWN OR THHN.
24. 20A/120V BRANCH CIRCUITS EXCEEDING 100' IN LENGTH FROM PANEL TO FARTHEST DEVICE SHALL USE NO. 10 CONDUCTORS AND 3/4"C.
25. FOR EVERY WORKING DEVICE MARK THE BRANCH CIRCUIT TO WHICH IT IS CONNECTED ON THE BACK OF EACH DEVICE PLATE, USING AN INDELIBLE MARKER PEN.
26. NOT USED.
27. EXACT LOCATION OF ALL FLOOR-MOUNTED OUTLETS SHALL BE COORDINATED WITH THE ARCHITECT BEFORE ROUGH-IN.
28. TWO OR MORE ADJACENT POWER OR COMMUNICATION RECEPTACLES SHALL BE GANGED WITH A COMMON FACE PLATE - IF THEY CAN NOT BE GANGED THEY SHALL BE INSTALLED WITH A MINIMUM DISTANCE BETWEEN UNITS.
29. WALL RECEPTACLES SHOWN BACK TO BACK MAY BE OFFSET BUT SHALL BE INSTALLED DIRECTLY ADJACENT TO ONE ANOTHER.
30. LIGHT SWITCHES SHALL BE NO MORE THAN 6" FROM EDGE OF DOOR FRAME.
31. WHERE PENETRATIONS ARE MADE THROUGH A REQUIRED FIRE-RESISTIVE WALL, OR PARTITION FOR THE PURPOSE OF RUNNING RACEWAY CARRYING ELECTRICAL, TELEPHONE, TELEVISION, OR LOCAL COMMUNICATION AND/OR SIGNALING CIRCUITS, THE OPENING AROUND THE RACEWAY SHALL BE FIRE STOPPED PER THE STATE BUILDING CODE. COORDINATION WITH THE GENERAL CONTRACTOR SHALL BE MAINTAINED TO INSURE THAT THIS FIRE STOPPING IS ACCOMPLISHED. USE APPROVED ASSEMBLIES SUCH AS THE FOLLOWING:
    * CONDUIT PENETRATIONS OF 1,2,3, & 4 HOUR GYP BOARD WALLS - U.L.#WL1001
    * CONDUIT PENETRATIONS OF 2,3, & 4 HOUR CONCRETE OR BLOCK WALLS - U.L.#CAJ1001
    * CONDUIT PENETRATIONS OD 2,3,& 4 HOUR CONCRETE FLOORS - U.L.#CAJ1001
    * CONDUIT PENETRATIONS OF 1 HOUR GYP BOARD CEILING ASSEMBLY - L526
    * MULT. CONDUIT PENETRATIONS OF 2,3,& 4 HOUR CONCRETE OR BLOCK WALL OR FLOOR - CAJ1042
32. IN REQUIRED FIRE RATED WALLS AND PARTITIONS, OPENINGS FOR INSTALLATION OF OF BOXES THAT ARE GREATER THAN 16 SQUARE INCHES SHALL BE PROTECTED AS REQUIRED BY U.L. COORDINATE CLOSELY WITH THE GENERAL CONTRACTOR TO INSURE THAT THE INTEGRITY OF THE U.L. RATING IS MAINTAINED.
33. OUTLET BOXES FOR DEVICES MOUNTED ON OPPOSITE SIDES OF FIRE RATED PARTITIONS SHALL NOT BE MOUNTED IN THE SAME WALL CAVITY. SEPARATED WALL PENETRATIONS BY MOUNTING ON OPPOSITE SIDES OF WALL STUDS OR OTHER VERTICAL STRUCTURAL MEMBERS IN THE WALL.
34. (SEISMIC REQUIREMENTS) ELECTRICAL EQUIPMENT SHALL MEET THE REQUIREMENTS OF SECTION 1621 OF THE 2002 IBC.
35. ELECTRICAL CONTRACTOR SHALL VERIFY THAT ALL AREAS IN WHICH FOOD IS PREPARED, OR IN WHICH UTENSILS ARE WASHED, SHALL BE PROVIDED WITH AT LEAST 50FC OF LIGHT ON FOOD PREPARATION WORK LEVELS AND AT UTENSILS WASHING WORK LEVELS. AT LEAST 10FC OF LIGHT AT 30 INCHES ABOVE THE FLOOR SHALL BE PROVIDED IN ALL OTHER WORK AREAS, INCLUDING STORAGE ROOMS AND WALK-IN UNITS. LIGHT BULBS IN FOOD PREPARATION, STORAGE, AND DISPLAY AREAS SHALL BE SHATTERPROOF OR SHIELDED SO AS TO PROTECT AGAINST BREAKAGE BY A SHIELD SURROUNDING AND EXTENDING BEYOND THE BUILD, LEAVING ONLY THE FACE OF THE BULB EXPOSED.

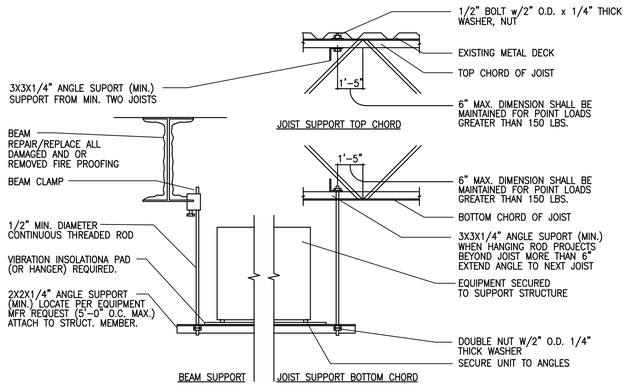

NOTES:

1) CONSULT WITH LANDLORD'S STRUCTURAL ENGINEER FOR LOCATION AND HANGING REQUIREMENTS FOR EQUIPMENT.
2) SIZE OF STRUCTURAL SUPPORTS (ROD ANGLES, ETC.) ARE MINIMUM AND SHALL BE SIZED BY TENANT OR TENANT CONTRACTOR AS REQUIRED FOR PROPER SUPPORT AND STRUCTURAL INTEGRETY.
3) DO NOT DRILL HOLES OR WELD TO EXISTING STRUCTURAL MEMBERS UNLESS APPROVED BY LANDLORD IN WRITING.
4) ATTACHMENT TO TOP CHORD IS PERMITTED AS SHOWN ABOVE. ATTACHMENT TO BOTTOM BY LANDLORD IN WRITING.
5) TRANSFORMER WEIGHT TBD IN FIELD. OBTAIN LANDLORD APPROVAL PRIOR TO EXECUTING THIS WORK.

TRANSFORMER MOUNTING

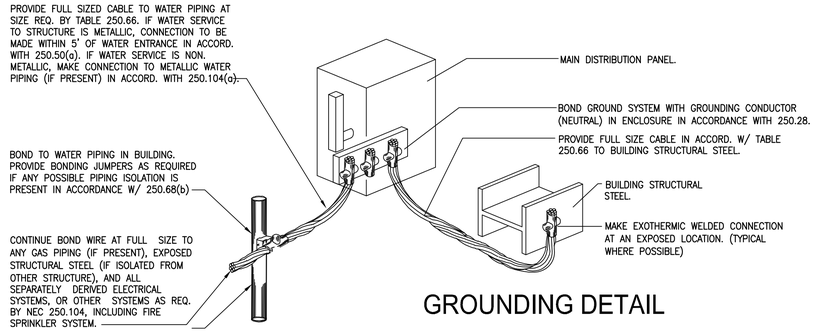

GROUNDING DETAIL

TENANT E.C. SHALL BE RESPONSIBLE FOR COMPLETE AND OPERABLE / CODE COMPLIANT INSTALLATION FROM EXISTING LANDLORD SERVICE BUS TO TENANT SPACE AND THROUGHOUT TENANT SPACE.

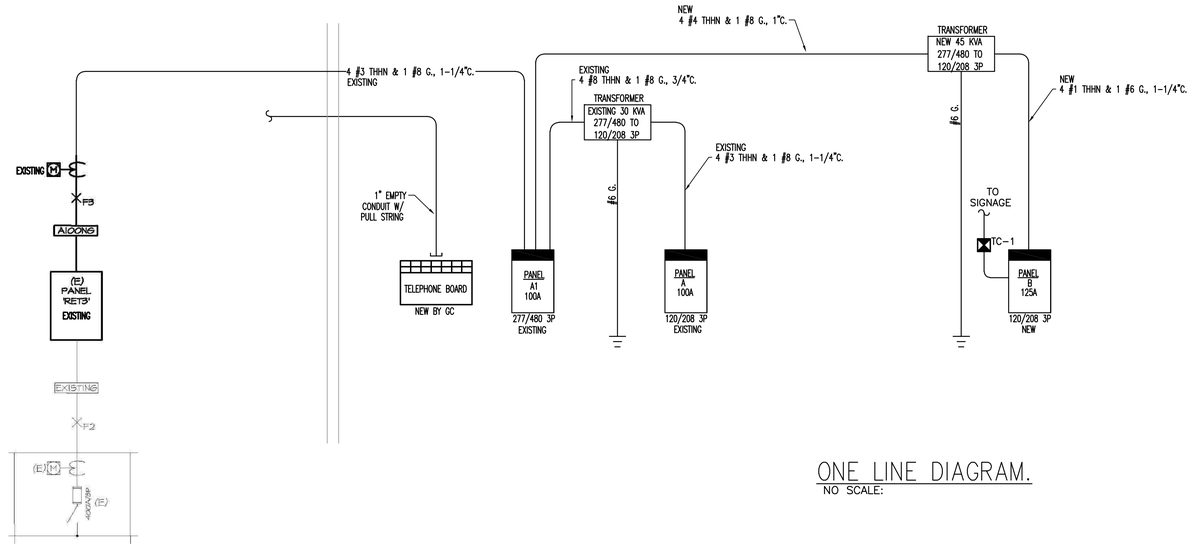

ONE LINE DIAGRAM.

NO SCALE:

CONTRACTOR SHALL FIELD VERIFY ALL EXISTING CONDITIONS AND DIMENSIONS PRIOR TO BID AND REPORT ANY DISCREPANCIES BACK TO OWNER. C.C. SHALL COORDINATE ALL SUB CONTRACTORS AND ENSURE A COMPLETE FULLY CODE COMPLIANT AND PROFESSIONALLY FINISHED TENANT SPACE.

ISSUED / REVISIONS:

ENGINEERING AND DESIGN PLLC
PO Box 213 (Nelling)
4236 HWY 36S0
Annville, KY 40402
FIRM 23179
Phone (606)-364-2886
Fax (606)-364-5100
E-Mail: eric@emrengineers.com
Web Address: emrengineers.com

COLORADO REGISTERED PROFESSIONAL ENGINEER 36557 9.13.23 PROFESSIONAL ENGINEER

BIDDING QUESTIONS CONTACT 920-757-1486

PERSPIRE SAUNA STUDIO

2450 SOUTH UNIVERSITY BLVD
UNIT 201
DENVER, CO 80210

CHECKED BY:	Staff
DRAWN BY:	Staff
DATE:	SEPTEMBER 12, 2023
SCALE:	PER PLAN
PROJECT No.:	PSS 2401

SHEET TITLE

ELECTRICAL ONE LINE DIAGRAM

SHEET No.

2.03A

COMcheck Software Version 4.1.5.5

Interior Lighting Compliance Certificate

Project Information

Energy Code:	2012 IECC
Project Title:	PERSPIRE SAUNA STUDIO
Project Type:	Alteration

Construction Site:
505 EAST HICKMAN ROAD
SUITE 140
WAUKEE, IA 50263

Owner/Agent:

Designer/Contractor:
ERIC ENGELL
EMR ENGINEERING AND DESIGN PLLC
4236 HWY 3630
PO BOX 213
ANNVILLE, KY 40402
606-364-2886
eric@emrengineers.com

Allowed Interior Lighting Power

A Area Category	B Floor Area (ft2)	C Allowed Watts / ft2	D Allowed Watts (B X C)
1-LOBBY (Common Space Types:Office - Open plan)	220	1.00	220
2-RESTROOM (Common Space Types:Restroom)	65	1.00	65
3-SAUNA (Common Space Types:Office - Open plan)	580	1.00	580
4-STORAGE (Common Space Types:Storage)	198	0.80	157
5-CORRIDOR (Common Space Types:Corridor / Transition)	218	0.70	153
		Total Allowed Watts =	1174

Proposed Interior Lighting Power

A Fixture ID : Description / Lamp / Wattage Per Lamp / Ballast	B Lamps/ Fixture	C # of Fixtures	D Fixture Watt.	E (C X D)
LOBBY (Common Space Types:Office - Open plan 220 sq.ft.)				
LED 1: B: 4" LED DOWNLIGHT, LED A Lamp 13W	1	6	13	78
LED 2: C: DRUM PENDANT: LED A Lamp 8W	1	3	38	114
RESTROOM (Common Space Types:Restroom 65 sq.ft.)				
LED 3: D: DRUM PENDANT: LED A Lamp 8W	1	1	19	19
LED 4: E: BACKLIT MIRROR: LED Linear 20W	1	1	20	20
SAUNA (Common Space Types:Office - Open plan 580 sq.ft.)				
LED 5: G: 6" LED DOWNLIGHT: LED PAR 10W	1	9	10	90
STORAGE (Common Space Types:Storage 198 sq.ft.)				
LED 5 copy 1: H: 2X4 LAYIN LED: LED Panel 33W	1	4	34	136
CORRIDOR (Common Space Types:Corridor / Transition 218 sq.ft.)				
LED 2 copy 1: C: DRUM PENDANT: LED A Lamp 8W	1	3	38	114
LED 1 copy 1: B: 4" LED DOWNLIGHT: LED A Lamp 13W	1	1	13	13
		Total Proposed Watts =		584

Interior Lighting PASSES

Interior Lighting Compliance Statement

Compliance Statement: The proposed interior lighting alteration project represented in this document is consistent with the building plans, specifications, and other calculations submitted with this permit application. The proposed interior lighting systems have been designed to meet the 2012 IECC requirements in COMcheck Version 4.1.5.5 and to comply with any applicable mandatory requirements listed in the Inspection Checklist.

Name - Title Signature Date

COMcheck Software Version 4.1.5.5

Inspection Checklist

Energy Code: 2012 IECC

Requirements: 30.0% were addressed directly in the COMcheck software

Text in the "Comments/Assumptions" column is provided by the user in the COMcheck Requirements screen. For each requirement, the user certifies that a code requirement will be met and how that is documented or that an exception is being claimed. Where compliance is itemized in a separate table, a reference to that table is provided.

Section # & Req.ID	Plan Review	Complies?	Comments/Assumptions
C103.2 [PR47]	Plans, specifications, and/or calculations provide all information with which compliance can be determined for the interior lighting and electrical systems and equipment and document where exceptions to the standard are claimed. Information provided should include interior lighting power calculations, wattage of bulbs and ballasts, transformers and control devices.	☐Complies ☐Does Not ☐Not Observable ☐Not Applicable	Requirement will be met.

Additional Comments/Assumptions:

1 High Impact (Tier 1) 2 Medium Impact (Tier 2) 3 Low Impact (Tier 3)

Section # & Req.ID	Rough-in Electrical Inspection	Complies?	Comments/Assumptions
C405.2.2.1 [EL22][2]	Automatic controls to shut off all building lighting installed in all buildings.	☐Complies ☐Does Not ☐Not Observable ☐Not Applicable	Requirement will be met.
C405.2.1.1 [EL23][2]	Independent lighting controls installed per approved lighting plans and all manual controls readily accessible and visible to occupants.	☐Complies ☐Does Not ☐Not Observable ☐Not Applicable	Requirement will be met.
C405.2.1.2 [EL15][1]	Lighting controls installed to uniformly reduce the lighting load by at least 50%.	☐Complies ☐Does Not ☐Not Observable ☐Not Applicable	Requirement will be met.
C405.2.2.3 [EL16][2]	Daylight zones provided with individual controls that control the lights independent of general area lighting.	☐Complies ☐Does Not ☐Not Observable ☐Not Applicable	Requirement will be met.
C405.2.3 [EL17][1]	Sleeping units have at least one master switch at the main entry door that controls wired luminaires and switched receptacles.	☐Complies ☐Does Not ☐Not Observable ☐Not Applicable	**Exception:** Requirement does not apply.
C405.2.2.2 [EL18][1]	Occupancy sensors installed in required spaces.	☐Complies ☐Does Not ☐Not Observable ☐Not Applicable	Requirement will be met.
C405.2.2.3 [EL20][1]	Primary sidelighted areas are equipped with required lighting controls.	☐Complies ☐Does Not ☐Not Observable ☐Not Applicable	Requirement will be met.
C405.2.2.3 [EL21][1]	Enclosed spaces with daylight area under skylights and rooftop monitors are equipped with required lighting controls.	☐Complies ☐Does Not ☐Not Observable ☐Not Applicable	**Exception:** Requirement does not apply.
C405.2.3 [EL4][1]	Separate lighting control devices for specific uses installed per approved lighting plans.	☐Complies ☐Does Not ☐Not Observable ☐Not Applicable	Requirement will be met.
C405.3 [EL19][1]	Fluorescent luminaires with odd numbered lamp configurations that are within 10 feet center to center (if recess mounted) or are within 1 foot edge to edge (if pendant or surface mounted) shall be tandem wired.	☐Complies ☐Does Not ☐Not Observable ☐Not Applicable	**Exception:** Requirement does not apply.
C405.4 [EL6][1]	Exit signs do not exceed 5 watts per face.	☐Complies ☐Does Not ☐Not Observable ☐Not Applicable	Requirement will be met.
C405.2.3 [EL8][1]	Additional interior lighting power allowed for special functions per the approved lighting plans and is automatically controlled and separated from general lighting.	☐Complies ☐Does Not ☐Not Observable ☐Not Applicable	Requirement will be met.

Additional Comments/Assumptions:

1 High Impact (Tier 1) 2 Medium Impact (Tier 2) 3 Low Impact (Tier 3)

Section # & Req.ID	Final Inspection	Complies?	Comments/Assumptions
C408.2.5.1 [FI16][1]	Furnished as-built drawings for electric power systems within 30 days of system acceptance.	☐Complies ☐Does Not ☐Not Observable ☐Not Applicable	Requirement will be met.
C303.3, C408.2.5.2 [FI17][1]	Furnished O&M instructions for systems and equipment to the building owner or designated representative.	☐Complies ☐Does Not ☐Not Observable ☐Not Applicable	Requirement will be met.
C405.5.2 [FI18][1]	Interior installed lamp and fixture lighting power is consistent with what is shown on the approved lighting plans, demonstrating proposed watts are less than or equal to allowed watts.	☐Complies ☐Does Not ☐Not Observable ☐Not Applicable	*See the Interior Lighting fixture schedule for values.*
C408.3 [FI33][1]	Lighting systems have been tested to ensure proper calibration, adjustment, programming, and operation.	☐Complies ☐Does Not ☐Not Observable ☐Not Applicable	Requirement will be met.

Additional Comments/Assumptions:

1 High Impact (Tier 1) 2 Medium Impact (Tier 2) 3 Low Impact (Tier 3)

CONTRACTOR SHALL FIELD VERIFY ALL EXISTING CONDITIONS AND DIMENSIONS PRIOR TO BID AND REPORT ANY DISCREPANCIES BACK TO OWNER. G.C. SHALL COORDINATE ALL SUB CONTRACTORS AND ENSURE A COMPLETE FULLY CODE COMPLIANT AND PROFESSIONALLY FINISHED TENANT SPACE.

ISSUED / REVISIONS:

ENGINEERING AND DESIGN PLLC
PO Box 213 (Mailing)
4236 HWY 3630
Annville, KY 40402
FIRM 23179
Phone (606)-364-2886
Fax (606)-364-5100
E-Mail: eric@emrengineers.com
Web Address: emrengineers.com

COLORADO REGISTERED ERIC ENGELL 36587 PROFESSIONAL ENGINEER 9.13.23

BIDDING QUESTIONS CONTACT 920-757-1486

PERSPIRE SAUNA STUDIO

2450 SOUTH UNIVERSITY BLVD
SUITE D1
DENVER, CO 80210

CHECKED BY:	Staff
DRAWN BY:	Staff
DATE:	SEPTEMBER 12, 2023
SCALE:	PER PLAN
PROJECT No.:	PSS 2401

SHEET TITLE

ENERGY COMPLIANCE

SHEET No.

2.04

Table 403.3.1.1 Minimum Ventilation Requirements FCU-1

OCCUPANCY CLASSIFICATION	OCCUPANCY DENSITY PER 1000 SF	SQUARE FOOTAGE	TOTAL OCCUPANCY	CFM PER PERSON	OUTDOOR AIR REQ'D	OUTDOOR AIR REQ'D PER SF	OUTDOOR AIR REQ'D	TOTAL O/A REQUIRED (CFM/PERSON+CFM/SF)/0.8
SAUNA	10/1000	230	3	5	15	0.06	14	36
TOILET ROOM	N/A	65	N/A	N/A	0	0.06	4	5
OFFICE	5/1000	80	1	5	5	0.06	5	12
CORRIDORS	N/A	175	N/A	N/A	0	0.06	11	13
STORAGE	N/A	295	N/A	N/A	0	0.12	35	44
							TOTAL O/A REQ'D	111 SET FCU-1 TO 115 CFM

Table 403.3.1.1 Minimum Ventilation Requirements FCU-2

OCCUPANCY CLASSIFICATION	OCCUPANCY DENSITY PER 1000 SF	SQUARE FOOTAGE	TOTAL OCCUPANCY	CFM PER PERSON	OUTDOOR AIR REQ'D	OUTDOOR AIR REQ'D PER SF	OUTDOOR AIR REQ'D	TOTAL O/A REQUIRED (CFM/PERSON+CFM/SF)/0.8
SAUNA	10/1000	230	2	5	10	0.06	14	30
LOBBY	30/1000	275	8	5	40	0.06	17	71
CORRIDORS	N/A	140	N/A	N/A	0	0.06	8	11
							TOTAL O/A REQ'D	101 SET FCU-2 TO 110 CFM

RETURN AIR PLENUM

MATERIALS WITHIN PLENUMS. EXCEPT AS REQUIRED BY SECTIONS 602.2.1.1 THROUGH 602.2.1.6, MATERIALS WITHIN PLENUMS SHALL BE NONCOMBUSTIBLE OR SHALL HAVE A FLAME SPREAD INDEX OF NOT MORE THAN 25 AND A SMOKE–DEVELOPED INDEX OF NOT MORE THAN 50 WHEN TESTED IN ACCORDANCE WITH ASTM E 84 ORUL 723.

EXCEPTIONS:
1. RIGID AND FLEXIBLE DUCTS AND CONNECTORS SHALL CONFORM TO SECTION 603.
2. DUCT COVERINGS, LININGS, TAPE AND CONNECTORS SHALL CONFORM TO SECTIONS 603 AND 604.
3. THIS SECTION SHALL NOT APPLY TO MATERIALS EXPOSED WITHIN PLENUMS IN ONE– AND TWO–FAMILY DWELLINGS.
4. THIS SECTION SHALL NOT APPLY TO SMOKE DETECTORS.
5. COMBUSTIBLE MATERIALS FULLY ENCLOSED WITHIN CONTINUOUS NONCOMBUSTIBLE RACEWAYS OR ENCLOSURES, APPROVED GYPSUM BOARD ASSEMBLIES OR WITHIN MATERIALS LISTED AND LABELED FOR SUCH APPLICATION.

602.2.1.1 WIRING. COMBUSTIBLE ELECTRICAL OR ELECTRONIC WIRING METHODS AND MATERIALS, OPTICAL FIBER CABLE, AND OPTICAL FIBER RACEWAY EXPOSED WITHIN APLENUM SHALL HAVE A PEAK OPTICAL DENSITY NOT GREATER THAN 0.50, AN AVERAGE OPTICAL DENSITY NOT GREATER THAN 0.15, AND A FLAME SPREAD NOT GREATER THAN 5 FEET (1524 MM) WHEN TESTED IN ACCORDANCE WITH NFPA 262. ONLY TYPE OFNP (PLENUM RATED NONCONDUCTIVE OPTICAL FIBER CABLE) SHALL BE INSTALLED IN PLENUM–RATED OPTICAL FIBER RACEWAYS. WIRING, CABLE, AND RACEWAYS ADDRESSED IN THIS SECTION SHALL BE LISTED AND LABELED AS PLENUM RATED AND SHALL BE INSTALLED IN ACCORDANCE WITH NFPA 70.

HEATING VENTILATING AND AIR-CONDITIONING

1. THE FOLLOWING SPECIFICATIONS SHALL GOVERN WITH MODIFICATIONS AS SPECIFIED HEREIN: AMERICAN SOCIETY OF HEATING, REFRIGERATING AND AIR CONDITIONING ENGINEERS (ASHREA) HANDBOOK FUNDAMENTALS.
2. EXTEND EXISTING FORCED AIR HEATING AND COOLING SYSTEM INTO NEW AREAS. HVAC SUBCONTRACTOR TO DETERMINE WHETHER NEW EQUIPMENT IS REQUIRED OR WHETHER A SUPPLEMENTAL UNIT IS REQUIRED. PROPOSAL SHALL INDICATE INTENDED APPROACH.
3. GENERAL CONTRACTOR, HVAC SUBCONTRACTOR AND ARCHITECT SHALL REVIEW THE PROPOSED LOCATIONS OF ALL SUPPLY AND RETURN REGISTERS IN THE FIELD PRIOR TO FABRICATION OR INSTALLATION OF NEW DUCTWORK.
4. GENERAL CONTRACTORS SHALL BE RESPONSIBLE FOR ALL CUTTING AND PATCHING (FLOORS, CEILINGS, WALL) REQUIRED BY THE NEW DUCTWORK. LANDLORD APPROVAL IN WRITTING REQUIRED PRIOR TO ALL CUTTING.
5. ALL DUCTS RUN THROUGH UNCONDITIONED SPACES (I.E. ATTICS, CRAWL SPACE) SHALL BE INSULATED (I.E. WRAPPED WITH R6 INSULATION).
6. NEW SYSTEM, ONCE COMPLETED, SHALL BE TESTED AND BALANCED TO THE SATISFACTION OF THE OWNER. TEST RUNS SHALL BE PERFORMED FOR BOTH HEATING AND COOLING MODES. CERTIFIED TEST AND BALANCE REPORT SHALL BE SUBMITTED TO LL AND TENANT.

EXHAUST FAN SCHEDULE

	CFM	SP " W.C.	RPM	DRIVE	WATTS	VOLTAGE PH. / HZ.	MANUFACTURER MODEL NO.	NOTES
EF-1	80	0.25"	1,550	DIRECT	87	120/1/60	BROAN QTXE80	1,2,3

NOTES:
1) FAN SHALL BE MOUNTED IN CEILING WITH VIBRATION ISOLATORS.
2) FAN SHALL BE CONTROLLED BY THE TOILET ROOM LIGHT SWITCH.
3) FAN SHALL BE PROVIDED WITH LOW LEAKAGE BACKDRAFT DAMPER.

THERMOSTATS

HONEYWELL T10 THERMOSTAT AND REMOTE SENSORS
(T)- THERMOSTAT MOUNTED AT 48" AFF
(RS)- REMOTE SENSOR MOUNTED AT 66"AFF
PROGRAM AND TRAIN OWNER ON PROGRAMMING

HVAC GENERAL NOTES

1. CONTRACTOR SHALL PROVIDE ALL LABOR, MATERIALS, TOOLS AND EQUIPMENT TO INSTALL AND OPERATE THE EXISTING HEATING AND COOLING SYSTEM.
2. CONTRACTOR SHALL PROVIDE ALL REQUIRED HVAC PERMITS.
3. THE CONTRACTOR SHALL COMPLY WITH NFPA–90A AND ALL APPLICABLE CODES.
4. CONTRACTOR SHALL PROVIDE ALL CONTACTORS, RELAYS AND THERMOSTATS. THE ELECTRICAL CONTRACTOR SHALL PROVIDE ALL SWITCHES, DISCONNECTS. THERMOSTATS SHALL BE AS SPECIFIED.
5. THE CONTRACTOR SHALL PROVIDE A WRITTEN GUARANTEE THAT SHALL WARRANT ALL WORKMANSHIP AND MATERIALS FOR ONE (1) YEAR FROM THE CERTIFICATE OF OCCUPANCY.
6. PROVIDE IONIZATION TYPE SMOKE DETECTORS WHERE SHOWN ON RETURN AND/OR SUPPLY DUCTS AS REQUIRED BY CODE. UPON ACTIVATION, THE SMOKE DETECTORS SHALL SHUT DOWN THE AIR DISTRIBUTION SYSTEM. THE SMOKE DETECTORS SHALL BE CONNECTED TO A FIRE ALARM SYSTEM. THE ACTUATION OF A SMOKE DETECTOR SHALL ACTIVATE A VISIBLE AND AUDIBLE SUPERVISORY SIGNAL AT A CONSTANTLY ATTENDED LOCATION PER CODE.
7. ALL HVAC WORK TO BE PERFORMED SHALL BE IN COMPLIANCE WITH ALL LOCAL, STATE AND FEDERAL CODES.
8. COORDINATE LOCATION OF ALL CEILING DIFFUSERS, GRILLES AND REGISTERS IN THE FIELD WITH THE ELECTRICIAN TO PREVENT CONFLICT WITH LIGHTS AND ARCHITECTURAL ELEMENTS.
9. PROVIDE TWO SETS OF FILTERS. MERV 12. ONE DURING CONSTRUCTION AND ONE FOR USE AFTER OCCUPANCY.
10. ALL WORK OF THIS TRADE SHALL BE COORDINATED WITH ALL OTHER TRADES TO AVOID ANY INTERFERENCES THAT MAY DELAY PROGRESS DURING CONSTRUCTION.
11. ELECTRICALLY OPERATED EQUIPMENT AND COMPONENTS SHALL BE U.L. LISTED. GAS FIRED EQUIPMENT IF APPLICABLE SHALL BE A.G.A. LABELED.
12. AIR BALANCE CONTRACTOR MUST BE AABC CERTIFIED. AN INDEPENDENT AIR BALANCE CONTRACTOR SHALL TEST AND BALANCE TO THE AIR QUANTITIES ON THE PLAN AND PROVIDE A T & B REPORT FOR APPROVAL, IN ACCORDANCE WITH AIR BALANCE COUNCIL STANDARDS. THREE COPIES OF THE TEST REPORT SHALL BE FURNISHED FOR REVIEW AND MUST BE APPROVED BEFORE OCCUPANCY.
13. CONTRACTOR SHALL FURNISH SHOP DRAWINGS FOR DUCTWORK, AIR DEVICES, AND ALL EQUIPMENT.
14. PROVIDE ACCESS FOR ALL COMPONENTS REQUIRING PERIODIC INSPECTION AND SERVICE THAT ARE LOCATED WITHIN THE SPACE OR REQUIRE ACCESS THROUGH THE SPACE. LABEL ACCESS DOORS AND PANELS OR CEILING TILES, RETURN REGISTERS OR DIFFUSERS UTILIZED FOR ACCESS WITH THE NAME OF THE HIDDEN COMPONENT(S). DEMONSTRATE ACCESS TO ALL HIDDEN COMPONENTS FOR THE FIELD REPRESENTATIVE PRIOR TO OCCUPANCY.
15. CONTRACTOR SHALL INSTALL ALL NECESSARY OFFSETS, BENDS, AND TRANSITIONS REQUIRED TO PROVIDE A COMPLETE SYSTEM.
16. CONTRACTOR SHALL INSTALL THERMOSTATS AT 48" ABOVE THE FINISHED FLOOR TO ANY OPERABLE COMPONENT. COORDINATE BOX LOCATIONS WITH THE ELECTRICAL CONTRACTOR.
17. CONTRACTOR SHALL INSTALL TURNING VANES AT ALL RECTANGULAR DUCTWORK TEES AND 90° ELBOWS WITHIN MAIN TRUNK DUCTS.
18. CONTRACTOR SHALL PROVIDE EQUIPMENT OF THE SCHEDULED CAPACITIES DESIGNED.
19. ALL DUCTWORK & INSULATION SHALL BE FABRICATED & INSTALLED ACCORDING TO THE MOST RECENT PUBLISHED ASHRAE & SMACNA STANDARDS. ALL DUCT JOINTS, SEAMS AND CONNECTIONS SHALL BE SECURELY FASTENED, SEALED, AND TAPED IN ACCORDANCE WITH THE CURRENT ENERGY CONSERVATION CODE INCLUDING UUL 181A AND 181B TAPES AND MASTICS. DUCT COVERINGS AND LININGS SHALL HAVE A FLAME SPREAD INDEX NOT MORE THAN 25 AND A SMOKE DEVELOPED INDEX NOT MORE THAN 50.
20. ALL RECTANGULAR, ROUND & FLEXIBLE DUCTS SHALL BE SIZED AS SHOWN ON THESE DRAWINGS. MINIMUM INTERNAL DIMENSIONS ARE GIVEN. THE CONTRACTOR SHALL INCREASE THE DUCT SIZE ACCORDINGLY FOR INTERNAL INSULATION. ALL DUCTWORK EXCEPT THE ROUND FLEXIBLE TYPE SHALL BE GALVANIZED STEEL. FIBERGLASS DUCT–BOARD SHALL BE AN ACCEPTABLE ALTERNATE WHERE ACCEPTABLE TO LOCAL CODE. IS NOT PERMITTED.
21. RETURN DUCTS SHALL HAVE A MINIMUM 1" THICK, 1.5 PCF DENSITY INSULATION OR AS REQUIRED BY CURRENT ENERGY CODE.
22. SUPPLY, TRANSFER AND OUTDOOR AIR DUCTS SHALL HAVE MINIMUM OF 1 1/2" THICK, 0.75 PCF FIBERGLASS INSULATION BLANKET WRAP WITH FACTORY–APPLIED REINFORCED KRAFT PAPER & ALUMINUM FOIL VAPOR BARRIER. OR AS REQUIRED BY CURRENT ENERGY CODE.
23. ALL FLEXIBLE ROUND SUPPLY DUCT SHALL BE THERMAFLEX G–KM AIR DUCT LISTED AS CLASS 1 BY UL STANDARD 181 & COMPLYING WITH NFPA 90A & 90B. DUCT SHALL BE FACTORY MADE & COMPOSED OF A CPE LINER BONDED TO A COATED STEEL WIRE HELIX SUPPORTING A FIBERGLASS SCRIM & 1–1/2" FIBERGLASS INSULATING BLANKET WRAP WITH BLACK POLYETHYLENE FILM VAPOR BARRIER. MAX. LENGTH SHALL SHALL BE 4'–0". USE 1" X 16 GA HANGER STRAPS. INSTALL 2 WRAPS OF DUCT TAPE OVER LINER WITH 4 SCREWS OR 1/2" WIDE METAL BAND CLAMP OR PANDUIT STRAP. INSTALL 2 WRAPS OF DUCT TAPE OVER JACKET & CLAMP.
24. ALL ROUND TAKE–OFFS FROM RECTANGULAR DUCTS SHALL BE A "CREATIVE METALS, INC." SPIN–TITE FITTING, MODEL MSED (SPIN–IN WITH SCOOP & DAMPER) OR APPROVED EQUAL.
25. REFRIGERANT LINES IF APPLICABLE SHALL BE TYPE "L" COPPER TUBING IN CONTINUOUS, UNCOUPLED & UNSPLICED LENGTHS FROM THE EVAPORATOR TO THE CONDENSER. REFRIGERANT LINES SHALL BE SIZED BY MANUFACTURER. PROVIDE THERMAL EXPANSION VALVES WITH HARD SHUT–OFFS & FILTER DRYER AT EVAPORATOR COILS. INSULATE THE SUCTION LINES WITH ARMSTRONG AP ARMAFLEX SS.
26. AIR DEVICES ABOVE DRYWALL CEILINGS SHALL HAVE OPPOSED–BLADE DAMPER WITH DEVICES. AIR DEVICES ABOVE LAY–IN CEILINGS SHALL HAVE DUCT DAMPERS WHERE SHOWN ON THE PLANS.
27. HVAC CONTRACTOR SHALL COORDINATE CONDENSATE DRAINS WITH PLUMBING CONTRACTOR.
28. SIZE OF DUCT TAKE–OFFS TO CEILING DIFFUSERS AND SUPPLY GRILLS IS SAME AS AIR DEVICE NECK SIZE, UNLESS OTHERWISE NOTED.
29. PROVIDE WHITE ON RED BACK GROUND ENGRAVED PLASTIC NAME PLATES WITH 1" LETTERING FOR ALL MECHANICAL EQUIPMENT, I.E. RTU–1, EF–1, ETC.
30. PROVIDE MINIMUM CLEARANCE FOR ALL HVAC EQUIPMENT REQUIRED FOR PROPER MAINTENANCE.
31. PRIME AND PAINT ALL OUTDOOR FERROUS MATERIALS WHICH WERE NOT PREVIOUSLY PAINTED.
32. THE FOLLOWING SPECIFICATIONS SHALL GOVERN WITH MODIFICATIONS AS SPECIFIED HEREIN; AMERICAN SOCIETY OF HEATING, REFRIGERATING AND AIR CONDITIONING ENGINEERS (ASHREA) HANDBOOK FUNDAMENTALS.
33. EXTEND EXISTING FORCED AIR HEATING AND COOLING SYSTEM INTO NEW AREAS. HVAC SUBCONTRACTOR TO DETERMINE WHETHER NEW EQUIPMENT IS REQUIRED OR WHETHER A SUPPLEMENTAL UNIT IS REQUIRED. PROPOSAL SHALL INDICATE INTENDED APPROACH.
34. GENERAL CONTRACTOR, HVAC SUBCONTRACTOR AND ARCHITECT SHALL REVIEW THE PROPOSED LOCATIONS OF ALL SUPPLY AND RETURN REGISTERS IN THE FIELD PRIOR TO FABRICATION OR INSTALLATION OF NEW DUCTWORK.
35. GENERAL CONTRACTORS SHALL BE RESPONSIBLE FOR ALL CUTTING AND PATCHING (FLOORS, CEILINGS, WALL) REQUIRED BY THE NEW DUCTWORK. LANDLORD APPROVAL IN WRITING REQUIRED PRIOR TO ALL CUTTING.
36. ALL DUCTS RUN THROUGH UNCONDITIONED SPACES (I.E. ATTICS, CRAWL SPACE) SHALL BE INSULATED (I.E. WRAPPED WITH MINIMUM OF R6 INSULATION OR AS REQUIRED BY CURRENT ENERGY CODE).
37. NEW SYSTEM, ONCE COMPLETED, SHALL BE TESTED AND BALANCED TO THE SATISFACTION OF THE OWNER. TEST RUNS SHALL BE PERFORMED FOR BOTH HEATING AND COOLING MODES.

REUSE OF EXISTING EQUIPMENT

1. EXISTING HVAC UNIT(S) SHALL BE REUSED AS INDICATED ON THE DRAWINGS. THE MECHANICAL CONTRACTOR SHALL, PROVIDE ALL LABOR AND MATERIALS REQUIRED TO INSURE THAT THE EXISTING EQUIPMENT IS IN GOOD WORKING ORDER. POINTS OF SERVICE SHALL INCLUDE, BUT NOT BE LIMITED, TO THE FOLLOWING:
2. REMOVE EXISTING AIR FILTERS AND REPLACE WITH NEW PLEATED AIR FILTERS. THOROUGHLY CLEAN ALL INTAKE LOUVERS OR SCREENS AND BOTH SIDES OF EVAPORATOR AND CONDENSING COILS.
3. CHECK ALL BELTS FOR WEAR, ALIGNMENT AND PROPER TENSION (ADJUST AND REPLACE AS NEEDED)
4. TIGHTEN MOTOR MOUNTS AS REQUIRED.
5. INSPECT AND LUBRICATE MOTORS, BEARINGS, AND SHAFTS AS PER MANUFACTURERS REQUIREMENTS.
6. INSPECT REFRIGERANT SYSTEM FOR LEAKS AND PROPER CHARGE, REPAIR LINES AND ADD REFRIGERANT IF NECESSARY.
7. THOROUGHLY CLEAN INTERIOR OF UNIT, INCLUDING BLOWER WHEEL AND DAMPER BLADES.
8. CONTRACTOR MAY CLEAN AND REUSE EXISTING DUCTWORK, SUPPLY DIFFUSERS, RETURN GRILLS AND THERMOSTAT IF THEY ARE IN GOOD CONDITION AND MATCH THE SIZE AND SPECIFICATIONS OF WHAT IS CALLED OUT ON THESE CONSTRUCTION DOCUMENTS.
9. CONTRACTOR SHALL PROVIDE NEW DUCTWORK, SUPPLY DIFFUSERS AND RETURN GRILLS AS NECESSARY TO SATISFY THE INTENT OF THESE DRAWINGS.
10. ENTIRE HVAC SYSTEM SHALL CONFORM TO ALL LOCAL, STATE AND APPLICABLE CODES.
11. THE MECH. CONTR. MUST VERIFY ALL EXISTING CONDITIONS AND SERVICES AT THE JOB SITE.
12. VERIFY AND RESET O/A THRU UNIT TO SPACE AS SCHEDULED.

GRILLE, REGISTER & DIFFUSER SCHEDULE

	MARK	MFGR.	MODEL	NECK VELOCITY FPM (MAX)	DEVICE SIZE	AIR PATTERN	MOUNTING	TYPE
	S–1 XX	TITUS	TMS	300	24" X 24"	ALL–WAY	PER PLAN	SUPPLY
	S–2 XX	TITUS	FL–20	300	10" X 48"	(2)2" SLOT 10"ø INLET	SURFACE	SUPPLY
		PROVIDE WITH ALL ASSOCIATED INSTALLATION COMPONENTS FOR COMPLETE, OPERABLE AND PROFESSIONAL INSTALLATION. FACTORY PLENUM AND FINISH END CAPS FOR HARD CEILING INSTALLATION AND BALANCING DAMPERS ACCESSIBLE FROM FACE OF DIFFUSER.						
	S–3 XX	TITUS	TMS	300	12" X 12"	ALL WAY	PER PLAN	SUPPLY
	R–1 XX	TITUS	50F	400	24" X 24"	ALL WAY HORIZONTAL	PER PLAN	RETURN
	R–2 XX	TITUS	50F	300	12" X 12"	ALL WAY	PER PLAN	RETURN
	R–3 XX	TITUS	50F	300	24" X 12"	ALL WAY	PER PLAN	RETURN

NOTES:
1. MOUNTING FRAMES SHALL BE COMPATIBLE WITH CEILING TYPE.
2. PROVIDE OPPOSED BLADE DAMPER WITH EXTENDED LEVER ARM THROUGH FACE OF DIFFUSER.
3. PROVIDE FACTORY WHITE FINISH.
4. ALL CEILING DIFFUSERS ARE ALL WAY DISCHARGE UNLESS NOTED OTHERWISE
5. DUCT RUNOUTS ARE SIZED PER THE NECK OF THE DIFFUSER.
6. ALL DIFFUSERS SHALL HAVE DAMPERS FOR BALANCING. IF NOT IN FACE OF DIFFUSER, INSTALL IN ACCESSIBLE DUCT.
7. NO ALTERNATES ACCEPTED.

DIFFUSER NECK SIZING	
0–99 CFM	6"
100–175 CFM	8"
176–275 CFM	10"
276–400 CFM	12"
401–535 CFM	14"

SHEET NOTES

1. EXISTING 4 TON AHU–1 TO REMAIN. REFURBISH TO LIKE NEW IN PLACE
2. EXISTING 6 TON AHU–2 TO REMAIN. REFURBISH TO LIKE NEW IN PLACE
3. EXISTING ERV–1, GREENHECK MINICORE 10VG–F TO REMAIN. REFURBISH TO LIKE NEW IN PLACE
4. TSTAT MOUNTED AND SMOKE DETECTOR TEST STATION AT 48" AFF
5. SMOKE DETECTOR FOR UNIT SHUTDOWN

INSTALLATION CRITERIA

MECHANICAL CONTRACTOR SHALL FIELD VERIFY EXISTING CONDITIONS AND MODIFY AS REQUIRED TO DISTRIBUTE AIR WITHIN THE SPACE AS SHOWN ON PLAN.

SUPPLY AND RETURN DUCTWORK SHALL BE INSTALLED TO MEET OR EXCEED ALL CODE REQUIREMENTS AND WITHIN ACCEPTABLE INDUSTRY STANDARDS. M.C. SHALL PROVIDE FOR A COMPLETE AND OPERABLE SYSTEM. REPLACE ANY EXISTING COMPONENTS AS REQUIRED. M.C. SHALL BE RESPONSIBLE FOR PROVIDING WARRANTY OF ALL WORK.

MAIN TRUNK SUPPLY DUCT WITH NO AIR DIFFUSERS NOT TO EXCEED 1000 FEET PER MINUTE VELOCITY.

ALL SUPPLY BRANCH AND RETURN DUCTWORK SHALL BE INSTALLED NOT TO EXCEED 500 FEET PER MINUTE VELOCITY.

DISTRIBUTION SUPPLY / RETURN DUCT WITH AIR DIFFUSERS /GRILLS NOT TO EXCEED 500 FEET PER MINUTE VELOCITY.

AIR AT DIFFUSERS FACE NOT TO EXCEED 500 FEET PER MINUTE.

PROVIDE SMOKE DETECTORS FOR UNIT SHUTDOWN AS REQUIRED BY CODE.

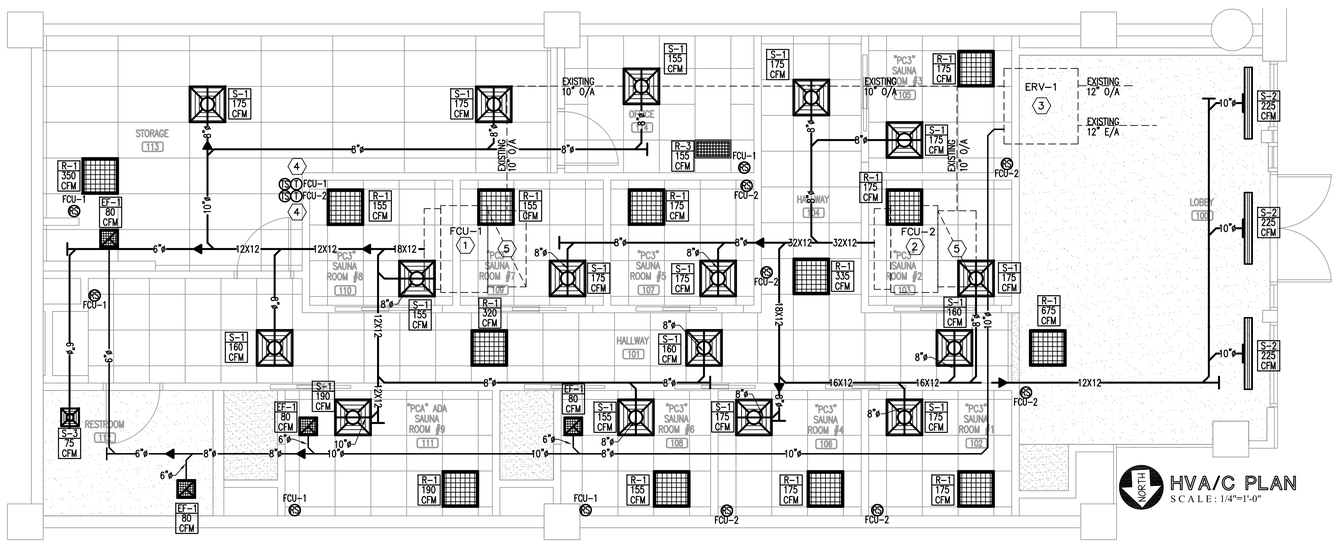

HVA/C PLAN
SCALE: 1/4"=1'-0"

ENGINEERING AND DESIGN PLLC
PO Box 213 (Nelling)
4236 HWY 36S
Annville, KY 40402
FIRM 23179
Phone (606)-364-2886
Fax (606)-364-5100
E–Mail: eric@emrengineers.com
Web Address: emrengineers.com

COLORADO REGISTERED PROFESSIONAL ENGINEER 36557 9.13.23 PROFESSIONAL ENGINEER

CONTRACTOR SHALL FIELD VERIFY ALL EXISTING CONDITIONS AND DIMENSIONS PRIOR TO BID AND REPORT ANY DISCREPANCIES BACK TO OWNER. G.C. SHALL COORDINATE ALL SUB CONTRACTORS AND ENSURE A COMPLETE FULLY CODE COMPLIANT AND PROFESSIONALLY FINISHED TENANT SPACE.

ISSUED / REVISIONS:

PERSPIRE SAUNA STUDIO

2450 SOUTH UNIVERSITY BLVD
SUITE 100
DENVER, CO 80210

BIDDING QUESTIONS CONTACT 920-757-1486

CHECKED BY:	Staff
DRAWN BY:	Staff
DATE:	SEPTEMBER 12, 2023
SCALE:	PER PLAN
PROJECT No.:	PSS 2401

SHEET TITLE
HVA/C FLOOR PLAN AND SCHEDULES

SHEET No.
3.01

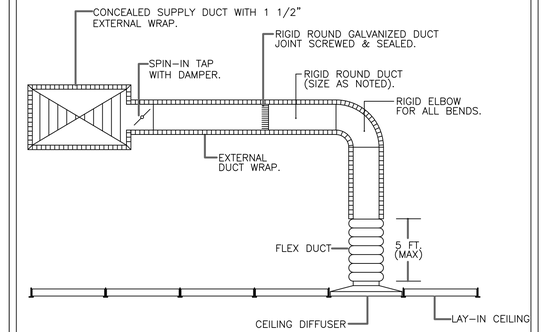

1 TYPICAL DUCT DETAIL

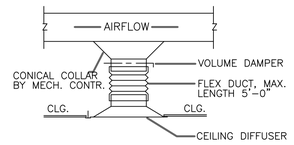

NOTES:

FLEXIBLE DUCT IS TO BE USED FOR VERTICAL DROPS ONLY. RUNOUTS AND ELBOWS ARE TO BE SHEET METAL DUCT.

THE MECHANICAL CONTRACTOR MUST PROVIDE ADAPTERS FOR DIFFUSERS WITH SQUARE AND RECTANGULAR NECKS AS REQUIRED.

2 BOTTOM DISCHARGE FLEX DUCT / DIFFUSER DETAIL

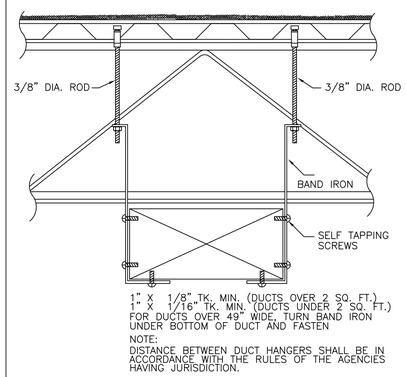

1" X 1/8" TK. MIN. (DUCTS OVER 2 SQ. FT.)
1" X 1/16" TK. MIN. (DUCTS UNDER 2 SQ. FT.)
FOR DUCTS OVER 49" WIDE, TURN BAND IRON UNDER BOTTOM OF DUCT AND FASTEN

NOTE:
DISTANCE BETWEEN DUCT HANGERS SHALL BE IN ACCORDANCE WITH THE RULES OF THE AGENCIES HAVING JURISDICTION.

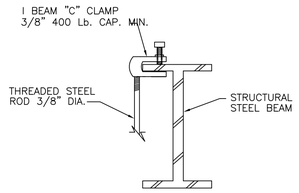

NOTE:
DISTANCE BETWEEN DUCT HANGERS SHALL BE IN ACCORDANCE WITH THE RULES OF THE AGENCIES HAVING JURISDICTION.

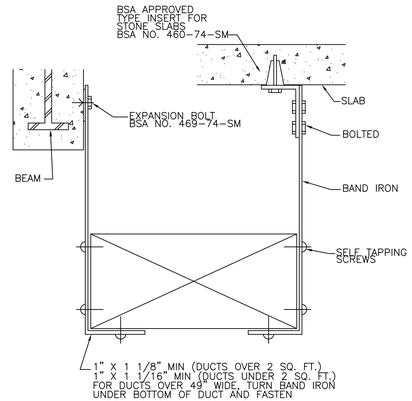

1" X 1 1/8" MIN (DUCTS OVER 2 SQ. FT.)
1" X 1 1/16" MIN (DUCTS UNDER 2 SQ. FT.)
FOR DUCTS OVER 49" WIDE, TURN BAND IRON UNDER BOTTOM OF DUCT AND FASTEN

3 TYPICAL METHOD OF HANGING DUCTWORK

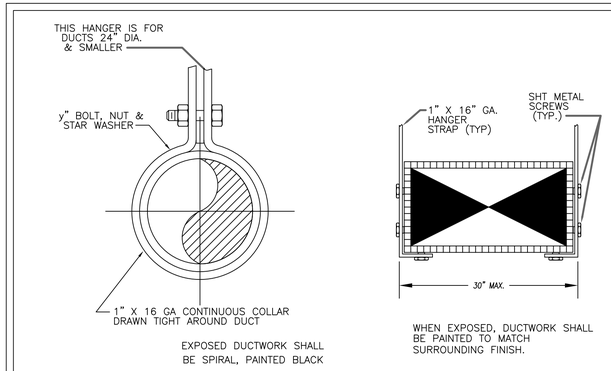

DUCT HANGERS SHALL BE INSTALLED TO MEET OR EXCEED CURRENT SMACNA STANDARDS OR LOCAL CODE WHICHEVER IS THE MOST STRINGENT.

4 TYPICAL DUCT HANGERS

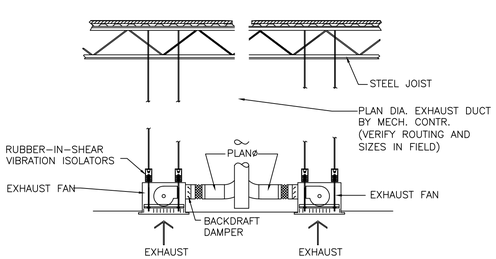

5 EXHAUST FAN

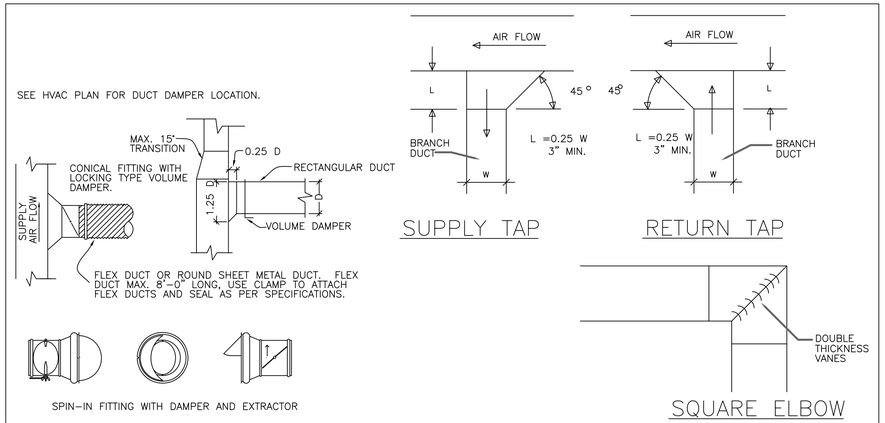

6 TYPICAL DUCT WORK DETAILS

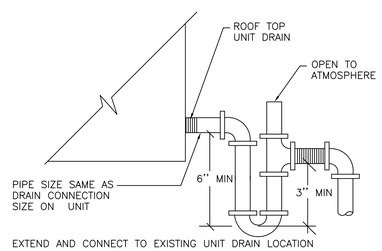

7 CONDENSATE DRAIN

CONTRACTOR SHALL FIELD VERIFY ALL EXISTING CONDITIONS AND DIMENSIONS PRIOR TO BID AND REPORT ANY DISCREPANCIES BACK TO OWNER. G.C. SHALL COORDINATE ALL SUB CONTRACTORS AND ENSURE A COMPLETE FULLY CODE COMPLIANT AND PROFESSIONALLY FINISHED TENANT SPACE.

ISSUED / REVISIONS:

ENGINEERING AND DESIGN PLLC
PO Box 213 (Melling) Phone (606)-364-2886
4236 HWY 3650 Fax (606)-364-5100
Annville, KY 40402 E-Mail: eric@emrengineers.com
FIRM 23179 Web Address: emrengineers.com

COLORADO REGISTERED PROFESSIONAL ENGINEER 36557 9.13.23

BIDDING QUESTIONS CONTACT 920-757-1486

PERSPIRE SAUNA STUDIO

2450 SOUTH UNIVERSITY BLVD
SUITE 101
DENVER, CO 80210

CHECKED BY:	Staff
DRAWN BY:	Staff
DATE:	SEPTEMBER 12, 2023
SCALE:	PER PLAN
PROJECT No.:	PSS 2401
SHEET TITLE	

HVA/C DETAILS

SHEET No.

3.02

RETURN AIR PLENUM

MATERIALS WITHIN PLENUMS. EXCEPT AS REQUIRED BY SECTIONS 602.2.1.1 THROUGH 602.2.1.6, MATERIALS WITHIN PLENUMS SHALL BE NONCOMBUSTIBLE OR SHALL HAVE A FLAME SPREAD INDEX OF NOT MORE THAN 25 AND A SMOKE-DEVELOPED INDEX OF NOT MORE THAN 50 WHEN TESTED IN ACCORDANCE WITH ASTM E 84 ORUL 723.

EXCEPTIONS:

1. RIGID AND FLEXIBLE DUCTS AND CONNECTORS SHALL CONFORM TO SECTION 603.
2. DUCT COVERINGS, LININGS, TAPE AND CONNECTORS SHALL CONFORM TO SECTIONS 603 AND 604.
3. THIS SECTION SHALL NOT APPLY TO MATERIALS EXPOSED WITHIN PLENUMS IN ONE- AND TWO-FAMILY DWELLINGS.
4. THIS SECTION SHALL NOT APPLY TO SMOKE DETECTORS.
5. COMBUSTIBLE MATERIALS FULLY ENCLOSED WITHIN CONTINUOUS NONCOMBUSTIBLE RACEWAYS OR ENCLOSURES, APPROVED GYPSUM BOARD ASSEMBLIES OR WITHIN MATERIALS LISTED AND LABELED FOR SUCH APPLICATION.

602.2.1.1 WIRING. COMBUSTIBLE ELECTRICAL OR ELECTRONIC WIRING METHODS AND MATERIALS, OPTICAL FIBER CABLE, AND OPTICAL FIBER RACEWAY EXPOSED WITHIN APLENUM SHALL HAVE A PEAK OPTICAL DENSITY NOT GREATER THAN 0.50, AN AVERAGE OPTICAL DENSITY NOT GREATER THAN 0.15, AND A FLAME SPREAD NOT GREATER THAN 5 FEET (1524 MM) WHEN TESTED IN ACCORDANCE WITH NFPA 262. ONLY TYPE OFNP (PLENUM RATED NONCONDUCTIVE OPTICAL FIBER CABLE) SHALL BE INSTALLED IN PLENUM-RATED OPTICAL FIBER RACEWAYS. WIRING, CABLE, AND RACEWAYS ADDRESSED IN THIS SECTION SHALL BE LISTED AND LABELED AS PLENUM RATED AND SHALL BE INSTALLED IN ACCORDANCE WITH NFPA 70.

TABLE 709.1 DRAINAGE FIXTURE UNITS	
TABLE 709.1 DRAINAGE FIXTURE UNITS	
FIXTURE	DFU
DRINKING FOUNTAIN	0.5
FLOOR DRAIN	2.0
KITCHEN SINK	2.0
LAVATORY	1.0
SERVICE SINK	2.0
SHOWER	2.0
WATER CLOSET	4.0
CLOTHS WASHER	2.0

710.1(1)

3" SLOPED AT 1/8" PER FOOT MAXIMUM CONNECTED 36 DRAINAGE FIXTURE UNITS

4" SLOPED AT 1/8" PER FOOT MAXIMUM CONNECTED 180 DRAINAGE FIXTURE UNITS

GENERAL NOTES

A. VERIFY EXACT LOCATIONS, ELEVATIONS AND CHARACTERISTICS OF UTILITIES AND PIPING BEFORE COMMENCEMENT OF WORK, AND IMMEDIATELY NOTIFY PROJECT MANAGER OF ANY DISCREPANCIES.

B. CONTRACTOR SHALL MAKE ALL ARRANGEMENTS WITH UTILITY COMPANIES FOR SERVICE AND CONNECTIONS AND PAY FOR ALL PERMITS, FEES, CHARGES AND METERS.

C. TERMINATE ALL VENT AND FLUE OUTLETS AT 10'-0" MINIMUM FOR ANY FRESH AIR INTAKES

D. INSTALL ALL PLUMBING TO AVOID INTERFERENCE WITH ELECTRICAL AND MECHANICAL EQUIPMENT AND STRUCTURAL FRAMING. NO WATER OR DRAIN LINES PERMITTED OVER UNDER ELECTRICAL PANELS. INSURE THAT ALL WATER LINES INSIDE ARE ADEQUATELY SECURED.

E. PROVIDE FAUCETS UNLESS OTHERWISE NOTED, TRAPS, STOPS, GATE VALVE, GAS COCKS, WATER HAMMER ARRESTORS, WALK THE NOTES, COVERS, FLEX CONNECTIONS, SHUT OFF VALVES AND INDIRECT WASTE TO AN APPROVED RECEPTOR AND ALL NECESSARY TRIM FOR COMPLETELY INSTALLED AND CONNECTED PLUMBING SYSTEM

F. RECORD ON AS BUILT DRAWINGS ALL SIZES, LOCATIONS, INVERTS AND MATERIALS OF EXISTING PIPES THAT ARE ENCOUNTERED AND NEW PIPES INSTALLED DURING THE COURSE OF THE PROJECT DELIVER AS BUILD'S TO THE CONSTRUCTION MANAGER AT THE END OF THE PROJECT

G. ALL WORK SHALL BE DONE IN ACCORDANCE WITH ALL LOCAL AND FEDERAL CODES, RULES AND REGULATIONS GOVERNING THIS PROJECT

H. UPON COMPLETION OF JOB, INSPECT ALL EXPOSED PORTIONS OF THE PLUMBING INSTALLATIONS AND COMPLETELY REMOVE ALL EXPOSED LABELS, SOIL, MARKINGS, AND FOREIGN MATERIAL EXCEPT PRODUCT LABELS AND THOSE REQUIRED BY LAW

I. PROVIDE FLEXIBLE GAS CONNECTIONS TO WATER HEATER AND COOKING EQUIPMENT. PROVIDE RIGID GAS CONNECTIONS TO ALL OTHER EQUIPMENT IN APPLIANCES AND WHERE LOCAL JURISDICTION PROHIBITS THE USE OF FLEXIBLE CONNECTIONS

J. VERIFY ALL EQUIPMENT AND APPLIANCE CONNECTION SIZES PRIOR TO MAKING FINAL CONNECTION. REDUCE BRANCH PIPE SIZING JUST PRIOR TO CONNECTION TO THE UNIT. PROVIDE ALL MATERIALS FOR CONNECTION TO ALL EQUIPMENT AND FIXTURES.

M. PROVIDE FIRE BOOTS AT FIRE WALL AND FLOOR PENETRATIONS WHEN REQUIRED BY CODE. FOR PVC PIPING AND OTHER MATERIALS THE FIRE INSPECTIONS DEPARTMENT MAY REQUIRE PROTECTION AROUND.

N. CONTRACTOR TO PROVIDE AND INSTALL CLAMPING RINGS AND COLLARS FOR ALL FLOOR DRAINS, FLOOR SINKS, FLOOR CLEANOUTS, AND ANY OTHER PLUMBING FLOOR PENETRATIONS. MAKE WATER TIGHT CONNECTION WITH WATERPROOFING MEMBRANE.

O. WHEN WORKING IN A REMODEL OR TENANT FINISH OUT IN AN EXISTING OCCUPIED BUILDING, THE CONTRACTOR IS TO OBSERVE THE FOLLOWING. REMOVE EXISTING WASTE PIPING NOT TO BE REUSED OR IN USE BY OTHER TENANTS. AVOID CONFLICTS BETWEEN NEW AND EXISTING PIPING SYSTEMS. TO ENSURE PROPER INSTALLATION OF THE NEW PIPING VERIFY FLOWLINE ELEVATION AND LOCATION OF EXISTING PIPING CONNECTION POINTS.

P. THE INTENT OF THE DRAWING HEREIN IS TO REPRESENT A COMPLETE WORKING SYSTEM. CONTRACTOR SHALL BE RESPONSIBLE FOR PROVIDING AND INSTALLING ALL COMPONENTS NECESSARY TO PROVIDE A COMPLETE WORKING AND CODE COMPLIANT SYSTEM WHETHER SHOWN OR NOT SHOWN ON THE DRAWINGS.

Q. GENERAL CONTRACTOR/ PLUMBING CONTACTOR TO SCOPE EXISTING SANITARY SEWER FOR VERIFICATION OF LINE CONDITION FROM THE TENANT SPACE TO THE EXTERIOR MAIN LATERAL AS REQUIRED. GENERAL CONTRACTOR TO PROVIDE VIDEO DOCUMENTATION OF EXISTING CONDITIONS TO FCDADSON.

PLUMBING FIXTURE SCHEDULE

	MARK	FIXTURE	WASTE	VENT	CW	HW	DESCRIPTION / REMARKS
	HWC	ACCESSIBLE WATER CLOSET	3"	3"	1/2"	---	ZURN Z5560 C1.6 GPF PRESSURE ASSIST, ADA HEIGHT, ELONGATED, TWO-PIECE TOILET, FLOOR MOUNTED VITREOUS CHINA, PRESSURE ASSISTED FLUSH, 1.6 GPF. HANDLE SHALL BE INSTALLED ON WIDE SIDE PER ACCESSIBILITY REQUIREMENTS. OLSONITE #95SS OPEN FRONT SEAT LESS COVER. JR SMITH 9230 BRONZE CLOSET RING ASSEMBLY, COLOR TO BE WHITE. ZURN Z8800CR 3/8" POLISHED CHROME ANGLE SUPPLY WITH STOP.
	LAV	LAVATORY WALL HUNG	2"	1-1/2"	1/2"	1/2"	KOHLER VOX 22" VESSEL SINK WITH OVERFLOW K-2660-1-0 WHITE. COMPLETE WITH AMERICAN STANDARD PARADIGM SELECTRONIC FAUCET 702B115.295 BRUSHED NICKEL. VESSEL BATHROOM FAUCET WITH MATCHING POP UP DRAIN SATIN NICKEL. BRASSCRAFT COMMERCIAL RIGID SUPPLIES, ANGLE STOPS AND CHROME PLATED 17 GA L.A. PATTERN CAST BRASS P-TRAP WITH SECURED ESCUTCHEON. P-TRAP AND HOT WATER SUPPLY SHALL BE WRAPPED FOR HANDICAP PROTECTION. PROVIDE TMV SET TO 105' FOR HOT WATER CONNECTION. COLOR TO BE WHITE. 0.5 GPM FLOW RESTRICTER.
	MB	MOP BASIN	3"	2"	1/2"	1/2"	FIAT PRODUCTS MOP SINK KIT MODEL NO. MSBIDTG-2424, 24X24 MOLDED STONE MOP BAIN. HOSE AND BRACKET, WALL MOUNTED FAUCET, 3 MOP HANGER BRACKET. WALL GUARD FIAT MSG2424 (12" TALL L SHAPED GUARD) 2 SIDES REQUIRED AT MOP SINK)
	WH	GAS WATER HEATER	---	---	1"	1"	RHEEM MODEL GPDV50-65 50 GALLON, 65 MBH NATURAL GAS. PROVIDE AN ASME RATED TEMP. & PRESS RELIEF VALVE & WATTS 3/4" N36-M1 VACUUM RELIEF VALVE. PROVIDE 4" DEEP DRAIN PAN. INSTALL 3/4" HOT WATER PUMP/TIMER 120 VOLT RE-CIRCULATION SYSTEM TACO 1/8 HP 6 GPM CAST IRON IN LINE, WET ROTOR HOT WATER CIRCULATOR PUMP OR EQUAL. SET TEMPERATURE TO 120'F. INSTALL VENT PER MANUFACTURER INSTALLATION MANUAL. MAINTAIN 10'-0" TO ALL OUTDOOR AIR INTAKES.
SD SH	SH	SHOWER TRIM-ACCESSIBLE	---	---	1/2"	1/2"	KOHLER 99243-G-BN AWAKEN HANDSHOWER KIT, BRUSHED NICKEL 2.0 GPM AND K-TS74042-4-BN RITE-TEMP® SHOWER VALVE TRIM. MOUNT TO MEET ALL ACCESSIBILITY REQUIREMENTS.
		SHOWER DRAIN	3"	2"	---	---	KOHLER CLEARFLO TILE-IN SHOWER DRAIN K-9136. INSTALL SURE SEAL WATERLESS TRAP PRIMER AND DEEP SEAL TRAP.
	WM	WATER MACHINE	1-1/2	1-1/2	1/2"	---	ELKAY EZH2O LIV BUILT-IN FILTERED WATER DISPENSER REMOTE CHILLER MODEL LBWD06 . COLOR ASPEN WHITE. PROVIDE AND INSTALL ERF750 - WATERSENTRY PLUS RESIDENTIAL REPLACEMENT FILTER AP99 - ELKAY ACCESS PANEL 14" X 29" X 6" (PROVIDE ONE REPLACEMENT FILTER) COORDINATE WITH G.C. FOR INSTALL OF ACCESS PANEL ADJACENT TO REFRIGERATOR IN WALL TO ACCESS REAR OF MACHINE FOR FUTURE SERVICE. INSTALL TO MEET ALL ACCESSIBILITY REQUIREMENTS
	FD	FLOOR DRAIN	3"	2"	---	---	JOSAM 30003-A-55 CAST IRON DRAIN WITH SATIN NIKOLOY STRAINER, CAST IRON FLASHING COLLAR. INSTALL SURE SEAL WATERLESS TRAP PRIMER AND DEEP SEAL TRAP.
	WCO	WALL CLEANOUT	PLAN	---	---	---	J.R. SMITH WALL CLEANOUT. FURNISH CHROME, SQUARE ACCESS COVER AND FRAME.
	FCO	FLOOR CLEANOUT	PLAN	---	---	---	JOSAM 57000-22 FLOOR CLEANOUT, LEVELEZE COATED CAST IRON BODY WITH ADJUSTABLE HOUSING, SATIN NIKALOY TOP AND INSIDE CAULK CONNECTION.
	TP	TRAP PRIMER	---	---	1/2"	---	PRECISION PLUMBING PRODUCTS TRAP PRIMER. BRONZE CONSTRUCTION WITH VACUUM PORTS. ADJUSTABLE WITH 1/2" COPPER TYPE L TO RECEPTOR.
	WHA	WATER HAMMER ARRESTOR	---	---	PLAN	PLAN	J.R. SMITH SERIES HYDROTROL, STAINLESS STEEL CONSTRUCTION.
	TMV	THERMOSTATIC MIXING VALVE	---	---	1/2"	1/2"	WATTS LEAD FREE LFUSG-B THERMOSTATIC MIXING VLAVE. BRASS. SET TO 109'F. INSTALL BELOW ALL HAND SINKS

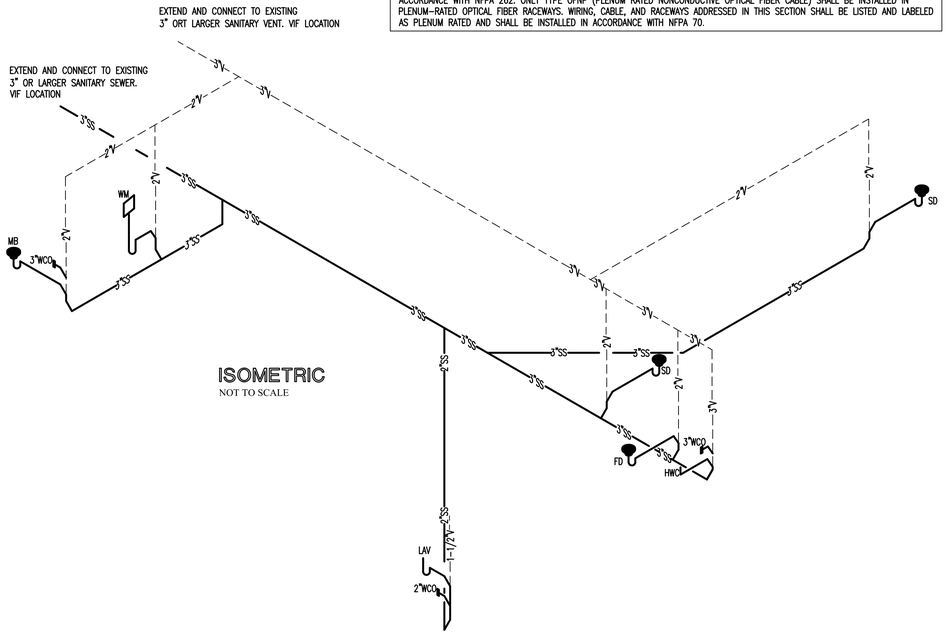

ISOMETRIC
NOT TO SCALE

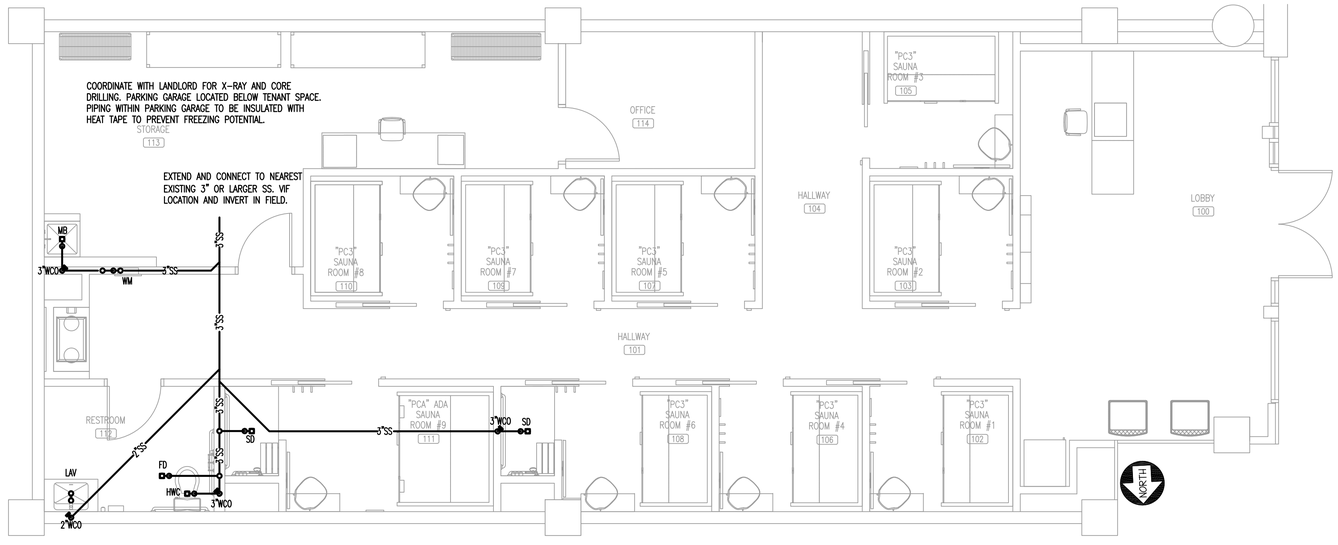

SANITARY SEWER PLAN
SCALE: 1/4"=1'-0"

CONTRACTOR SHALL FIELD VERIFY ALL EXISTING CONDITIONS AND DIMENSIONS PRIOR TO BID AND REPORT ANY DISCREPANCIES BACK TO OWNER. G.C. SHALL COORDINATE ALL SUB CONTRACTORS AND ENSURE A COMPLETE FULLY CODE COMPLIANT AND PROFESSIONALLY FINISHED TENANT SPACE.

ISSUED / REVISIONS:

ENGINEERING AND DESIGN PLLC
PO Box 213 (Nelling)
4236 HWY 36S
Annville, KY 40402
Phone (606)-364-2886
Fax (606)-364-5100
E-Mail: eric@emrengineers.com
Web Address: emrengineers.com
FIRM 23179

COLORADO REGISTERED PROFESSIONAL ENGINEER 36557 9.13.23 PROFESSIONAL ENGINEER

BIDDING QUESTIONS CONTACT 920-757-1466

PERSPIRE SAUNA STUDIO

2450 SOUTH UNIVERSITY BLVD
SUITE 101
DENVER, CO 80210

CHECKED BY:	Staff
DRAWN BY:	Staff
DATE:	SEPTEMBER 12, 2023
SCALE:	PER PLAN
PROJECT No.:	PSS 2401

SHEET TITLE
PLUMBING PLANS AND ISOMETRIC

SHEET No.
4.01

SHEET KEY NOTES

1. EXISTING WATER SERVICE TO SPACE. VIF LOCATION AND CONDITION OF EXISTING CONDITIONS WITH LANDLORD REP. INSTALL ALL REQUIRED COMPONENTS NECESSARY FOR A COMPLETE/CODE COMPLIANT INSTALLATION. PROVIDE SHUT OFF AND LABEL CEILING TILE. "MAIN WATER SHUT OFF"
2. 1/2" HOT AND COLD WATER DOWN WITH 1/2" HOT AND COLD WATER TO FIXTURES, INSTALL WATER HAMMER ARRESTOR ON TOP OF FEED DOWN.
3. 3/4" HOT AND COLD WATER DOWN TO WATER HEATER.
4. WATTS LFUSG-B THERMOSTATIC MIXING VALVE SET TO 109°F BELOW HAND SINK.
5. PC. TO INSTALL BOTTLE FILLER PER MANUFACTURER INSTALL MANUAL.
6. 1/2" 2 PSI NATURAL GAS. EXTEND TO EXISTING NATURAL GAS STUB TO TENANT SPACE. VIF LOCATION. INSTALL REGULATOR AND SHUT OFF AHEAD OF CONNECTION TO WATER HEATER. COORDINATE ROUTING IN FILED WITH LANDLORD REPRESENTATIVE FOR INSTALLATION OF COMBUSTION AND EXHAUST AIR 4"PVC. ENSURE FULLY CODE COMPLIANT NATURAL GAS WATER HEATER INSTALLATION PER MANUFACTURER'S INSTALLATION MANUAL.

PLUMBING LEGEND

DEFINITION	SYMBOL OR ABBREVIATION
DOMESTIC HOT WATER	——HW——
DOMESTIC COLD WATER	——CW——
DOMESTIC SOFT WATER	——SFWS——
HOT WATER RETURN	——HWR——
VENT PIPING	------V------
SANITARY WASTE	——SS——
GAS PIPING	——NAT——
RISER DOWN (ELBOW)	
RISER UP (ELBOW)	
TEE DOWN	
RPZ BACKFLOW PREVENTER	
CHECK VALVE	
ROOF DRAIN (AREA SERVED)	RD-1 4" 1,650 SF
FLOOR DRAIN	FD-
CLEANOUT	CO-
WALL HYDRANT	
BALANCING VALVE	
BALL VALVE	
CONDENSATE DRAIN	CD
SECONDARY COND. DRAIN	SD

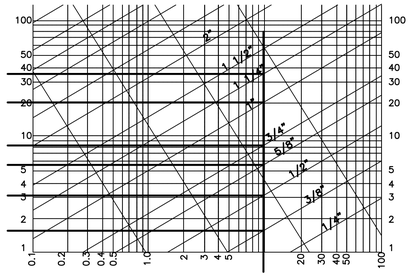

PRESSURE DROP PER 100 FEET OF TUBE, POUNDS PER SQUARE INCH

BRANCH PIPE SIZING CHART FOR 10 PSI. LOSS

WATER SUPPLY CALCULATIONS

FIXTURE NAME	NO.	F.U.	TOT.
WATER CLOSET (FLUSH TANK)	1	X 3.0 =	3.0
LAVATORY	1	X 1.0 =	1.0
MOP BASIN	1	X 3.0 =	3.0
WATER MACHINE	1	X 0.5 =	0.5
SHOWER	2	X 3.0 =	6.0
		TOTAL FIXTURE UNITS	13.5

13.5 FIXTURE UNITS = 16.7 GALLONS PER MINUTE (G.P.M.)
1"CW LINE WILL SUPPLY 20 GALLONS PER MINUTE

PIPE LENGTH TAP TO METER	10 FT
PIPE LENGTH METER TO LAST FIXTURE	110 FT
VERTICAL PIPE LENGTH TO HIGHEST FIXTURE	10 FT
TOTAL PIPE LENGTH	110 FT
FITTING LOSS (20%)	26 FT
TOTAL DEVELOPED LENGTH	156 FT

WATER PIPE SIZING CRITERIA:

SUPPLY PRESSURE (ASSUME)(INSTALL PRV AS REQUIRED) 50 PSIG

FRICTION LOSS (PSI):

BACK FLOW PREVENTER LOSS	12.00 PSI
METER LOSS	8.00 PSI
HIGHEST PRESS. REQ'D. AT FIXTURE.	15.00 PSI
TOTAL OVERALL LOSSES	35.00 PSI
PRESSURE AVAILABLE FOR PIPING	15.0 PSI

15 PSI / 156 TDL X 100 = 9.6 PSI MAXIMUM PRESS. DROP ALLOWABLE/100 FT. OF PIPE

PER IPC APPENDIX E. TABLE E201.1
TDL 150 FEET
50-60 PSI
3/4" METER WITH 1" DISTRIBUTION
25 WSFU

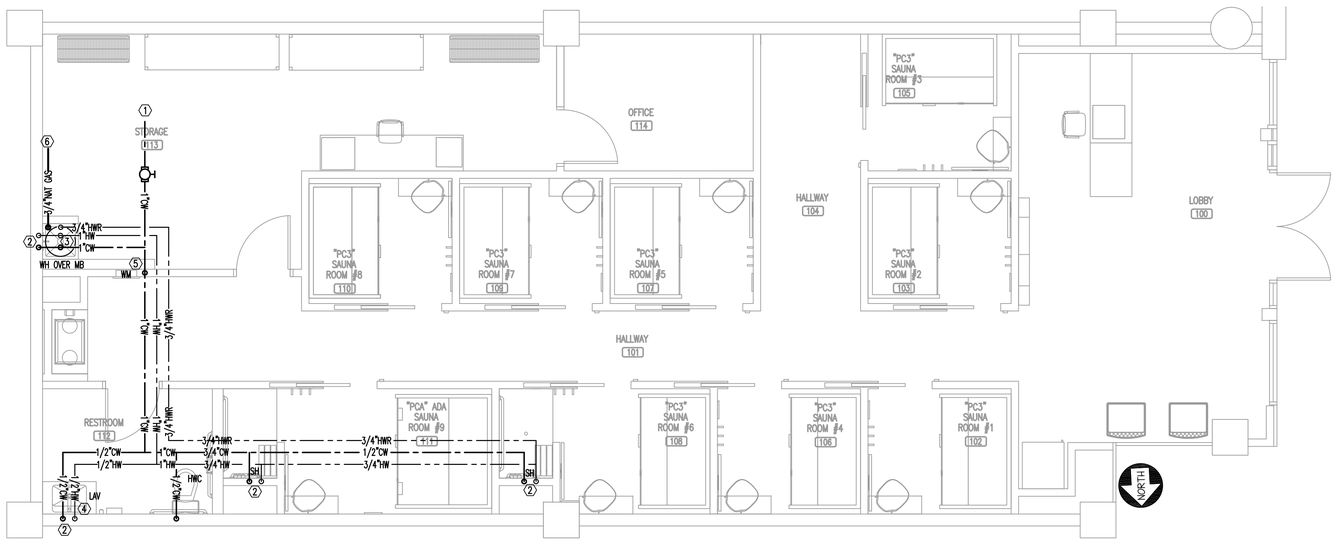

DOMESTIC WATER / NATURAL GAS PLAN

SCALE: 1/4"=1'-0"

CONTRACTOR SHALL FIELD VERIFY ALL EXISTING CONDITIONS AND DIMENSIONS PRIOR TO BID AND REPORT ANY DISCREPANCIES BACK TO OWNER. G.C. SHALL COORDINATE ALL SUB CONTRACTORS AND ENSURE A COMPLETE FULLY CODE COMPLIANT AND PROFESSIONALLY FINISHED TENANT SPACE.

ISSUED / REVISIONS:

EMR ENGINEERING AND DESIGN PLLC
PO Box 213 (Nelling)
4236 HWY 3650
Annville, KY 40402
Phone (606)-364-2886
Fax (606)-364-5100
E-Mail: eric@emrengineers.com
Web Address: emrengineers.com
FIRM 23179

COLORADO REGISTERED ERIC EMRICH 36557 PROFESSIONAL ENGINEER 9.13.23

BIDDING QUESTIONS CONTACT 920-757-1466

PERSPIRE SAUNA STUDIO

2450 SOUTH UNIVERSITY BLVD
SUITE 101
DENVER, CO 80210

CHECKED BY:	Staff
DRAWN BY:	Staff
DATE:	SEPTEMBER 12, 2023
SCALE:	PER PLAN
PROJECT No.:	PSS 2401

SHEET TITLE
DOMESTIC WATER PLAN

SHEET No.
4.02

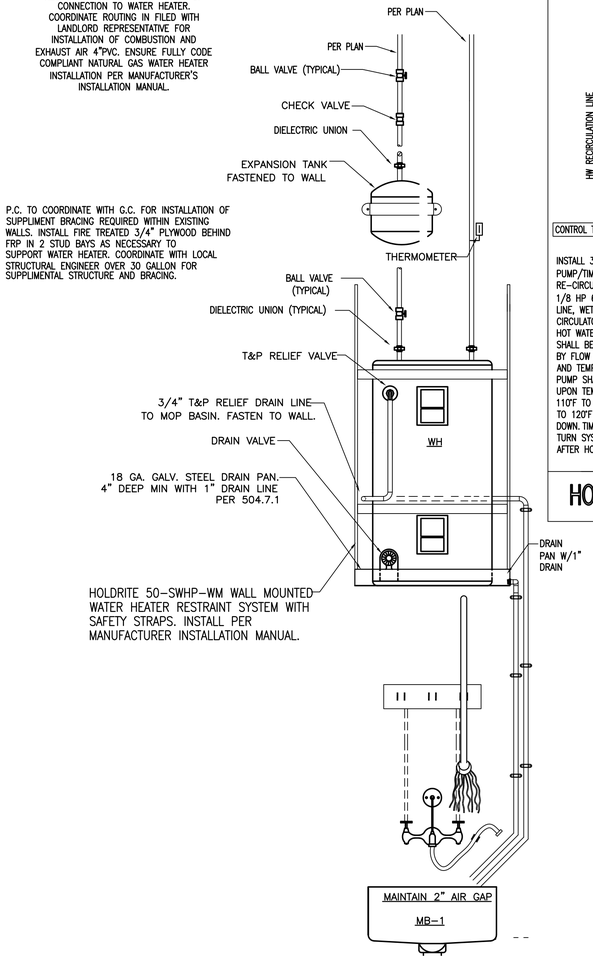

1 WATER HEATER DETAIL

ALL HOT WATER PIPING SHALL BE INSULATED WITH A MINIMUM OF 1" INSULATION PER IECC SECTION 504.

N.T.S.

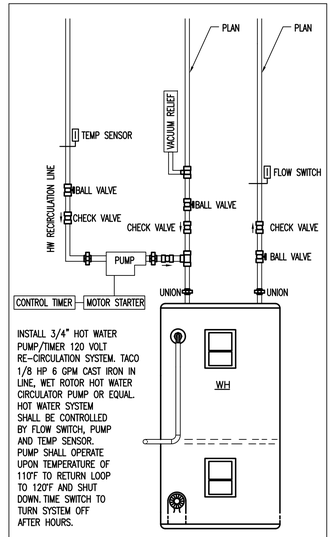

INSTALL 3/4" HOT WATER PUMP/TIMER. 120 VOLT RE-CIRCULATION SYSTEM. TACO 1/8 HP 6 GPM CAST IRON IN LINE, WET ROTOR HOT WATER CIRCULATOR PUMP OR EQUAL. HOT WATER SYSTEM SHALL BE CONTROLLED BY FLOW SWITCH, PUMP AND TEMP SENSOR. PUMP SHALL OPERATE UPON TEMPERATURE OF 110°F TO RETURN LOOP TO 120°F AND SHUT DOWN. TIME SWITCH TO TURN SYSTEM OFF AFTER HOURS.

HOT WATER RECIRCULATION

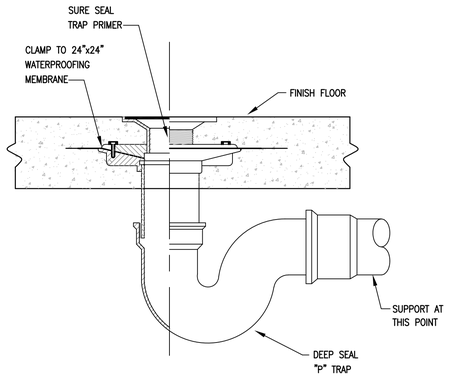

2 FLOOR DRAIN

N.T.S.

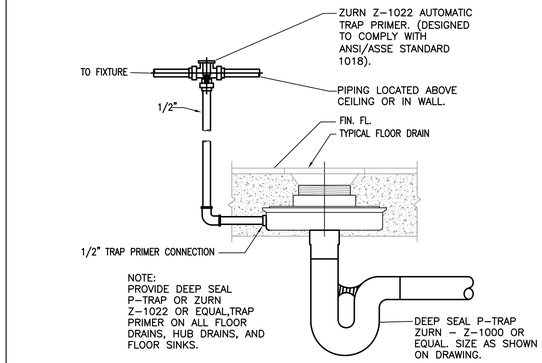

3 FLOOR DRAIN / MECH TRAP PRIMER

MECHANICAL TRAP PRIMER INSTALLED ON ALL FLOOR DRAINS

N.T.S.

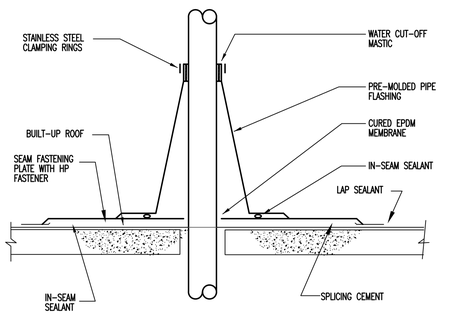

4 VENT THRU ROOF

N.T.S.

INSTALL ON ALL EXPOSED ADA HAND SINKS AND LOUNGE SINK

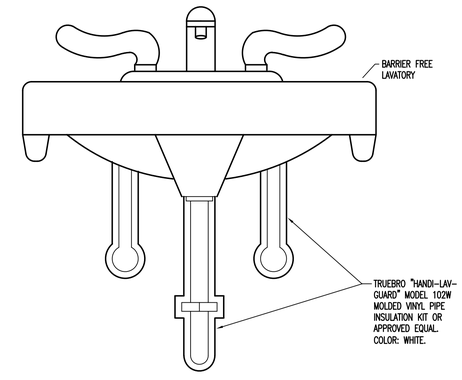

5 ADA PIPE SHROUDING

N.T.S.

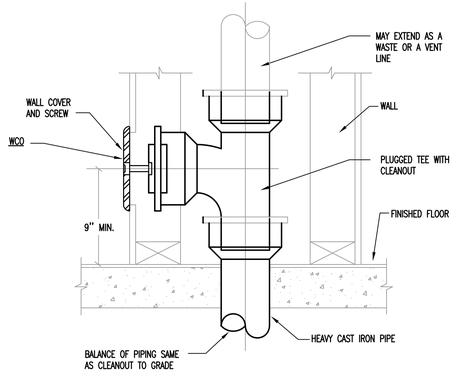

7 TYPICAL WALL CLEANOUT DETAIL

N.T.S.

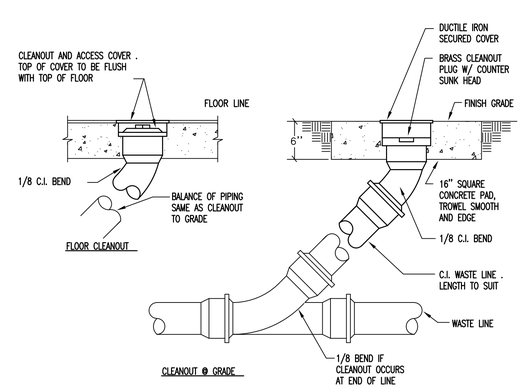

8 TYPICAL CLEANOUT(S) DETAIL

N.T.S.

6 NOT USED

N.T.S.

CONTRACTOR SHALL FIELD VERIFY ALL EXISTING CONDITIONS AND DIMENSIONS PRIOR TO BID AND REPORT ANY DISCREPANCIES BACK TO OWNER. G.C. SHALL COORDINATE ALL SUB CONTRACTORS AND ENSURE A COMPLETE FULLY CODE COMPLIANT AND PROFESSIONALLY FINISHED TENANT SPACE.

ISSUED / REVISIONS:

ENGINEERING AND DESIGN PLLC
PO Box 213 (Mailing)
4236 HWY 3530
Annville, KY 40402
FIRM 23179
Phone (606)-364-2886
Fax (606)-364-5100
E-Mail: eric@emrengineers.com
Web Address: emrengineers.com

COLORADO REGISTERED PE ENGINEER 36587 9.13.23 PROFESSIONAL ENGINEER

BIDDING QUESTIONS CONTACT 920-757-1486

PERSPIRE SAUNA STUDIO

2450 SOUTH UNIVERSITY BLVD
SUITE D1
DENVER, CO 80210

CHECKED BY:	Staff
DRAWN BY:	Staff
DATE:	SEPTEMBER 12, 2023
SCALE:	PER PLAN
PROJECT No.:	PSS 2401

SHEET TITLE

PLUMBING DETAILS

SHEET No.

4.03

PLUMBING SPECIFICATIONS

DIVISION 15 – MECHANICAL / PLUMBING

TABLE OF CONTENTS

SECTION	
15010	SPECIAL REQUIREMENTS FOR MECHANICAL PLUMBING
15400	PLUMBING
15410	PLUMBING PIPING
15440	PLUMBING FIXTURES

SECTION 15010 – SPECIAL REQUIREMENTS FOR MECHANICAL PLUMBING

PART 1.00 – GENERAL

1.01 REFERENCES:

A. THE GENERAL CONDITIONS AND SPECIAL CONDITIONS ARE A PART OF THIS SECTION.
B. WHERE ITEMS OF THE GENERAL CONDITIONS AND SPECIAL CONDITIONS ARE REPEATED IN THIS SECTION OF THE SPECIFICATIONS, IT IS MERELY INTENDED TO QUALIFY OR TO CALL ATTENTION TO THEM. IT IS NOT INTENDED THAT ANY OTHER PART OF THE GENERAL CONDITIONS SHALL BE ASSUMED TO BE OMITTED IF NOT REPEATED HEREIN.
C. THIS SECTION APPLIES EQUALLY AND SPECIFICALLY TO ALL CONTRACTORS SUPPLYING LABOR AND/OR EQUIPMENT AND/OR MATERIALS AS REQUIRED UNDER EACH SECTION OF THIS DIVISION.

1.02 INTENT:

A. IT IS THE INTENTION OF THE SPECIFICATIONS AND DRAWINGS TO CALL FOR FINISHED WORK, TESTED AND READY FOR OPERATION. ANY APPARATUS, APPLIANCE, MATERIAL OR WORK NOT SHOWN ON THE DRAWINGS, BUT MENTIONED IN THE SPECIFICATIONS OR VICE-VERSA, OR ANY INCIDENTAL ACCESSORIES NECESSARY TO MAKE THE WORK COMPLETE AND PERFECT IN ALL RESPECT AND READY FOR OPERATION, EVEN IF NOT PARTIALLY SPECIFIED, SHALL BE FINISHED, DELIVERED AND INSTALLED UNDER THEIR RESPECTIVE DIVISION WITHOUT ADDITIONAL EXPENSE TO THE OWNER.
B. MINOR DETAILS NOT USUALLY SHOWN OR SPECIFIED, BUT NECESSARY FOR THE PROPER INSTALLATION AND OPERATION, SHALL BE INCLUDED IN THE WORK AS THOUGH THEY ARE HEREINAFTER SPECIFIED OR SHOWN.
C. WORK UNDER EACH SECTION SHALL INCLUDE GIVING WRITTEN NOTICE TO THE OWNER OF ANY MATERIALS OR APPARATUS BELIEVED INADEQUATE OR UNSUITABLE, IN VIOLATION OF LAWS, ORDINANCES , RULES OR REGULATIONS OF AUTHORITIES HAVING JURISDICTION, AND NECESSARY ITEMS OF NOTICE, IT IS MUTUALLY AGREED THAT WORK UNDER EACH DIVISION HAS INCLUDED THE COST OF ALL REQUIRED ITEMS FOR THE APPROVED SATISFACTORY FUNCTIONING OF THE ENTIRE SYSTEM WITHOUT EXTRA COMPENSATION.

1.03 DRAWINGS:

A. DRAWINGS ARE DIAGRAMMATIC AND INDICATE THE GENERAL ARRANGEMENT OF SYSTEMS AND WORK INCLUDED IN THE CONTRACT. DO NOT SCALE THE DRAWINGS. CONSULT THE DESIGNER DRAWINGS AND DETAILS EXACT LOCATION OF FIXTURES AND EQUIPMENT, WHERE SAME ARE NOT DEFINITELY LOCATED, OBTAIN THIS INFORMATION FROM THE DESIGNER.
B. WORK UNDER EACH SECTION SHALL CLOSELY FOLLOW DRAWINGS IN LAYOUT OF WORK AND CHECK DRAWINGS OF OTHER DIVISIONS TO VERIFY SPACES IN WHICH WORK WILL BE INSTALLED. MAINTAIN MAXIMUM HEADROOM AND WHERE SPACE CONDITIONS APPEAR INADEQUATE, ENGINEER SHALL BE NOTIFIED BEFORE PROCEEDING WITH INSTALLATIONS.
C. ENGINEER MAY, WITHOUT EXTRA CHARGE, MAKE REASONABLE MODIFICATIONS IN THE LAYOUT AS NEEDED TO PREVENT CONFLICT WITH WORK OF OTHER TRADES OR FOR PROPER EXECUTION OF THE WORK.
D. WHERE VARIANCES OCCUR BETWEEN THE DRAWINGS AND SPECIFICATIONS OR WITHIN EITHER OF THE DOCUMENTS, THE ITEM OR ARRANGEMENT OF BETTER QUALITY, OR HIGHER COST, SHALL BE INCLUDED IN THE CONTRACT PRICE. THE ENGINEER SHALL DECIDE ON THE ITEM AND THE MANNER IN WHICH THE WORK SHALL BE INSTALLED.

1.04 SURVEYS AND MEASUREMENTS:

A. BEFORE SUBMITTING TO HIS BID, THE CONTRACTOR SHALL VISIT THE SITE, AND THE EXISTING BUILDING AND SHALL BECOME THOROUGHLY FAMILIAR WITH ALL CONDITIONS UNDER WHICH HIS WORK WILL BE INSTALLED, AS HE WILL BE HELD RESPONSIBLE FOR ANY ASSUMPTIONS HE MAKES OR ANY OMISSIONS OR ERRORS HE MAKES AS A RESULT OF HIS FAILURE TO BECOME FAMILIAR WITH THE SITE, THE EXISTING BUILDING AND THE CONTRACT DOCUMENTS.
B. THE CONTRACTOR SHALL BASE ALL MEASUREMENTS, BOTH HORIZONTAL AND VERTICAL FROM ESTABLISHED BENCH MARKS. ALL WORK SHALL AGREE WITH THESE ESTABLISHED LINES AND LEVELS. VERIFY ALL MEASUREMENTS AT SITE AND CHECK THE CORRECTNESS OF SAME AS RELATED TO THE WORK.
C. SHOULD THE CONTRACTOR DISCOVER ANY DISCREPANCY BETWEEN ACTUAL MEASUREMENTS AND THOSE INDICATED, WHICH PREVENTS FOLLOWING GOOD PRACTICE OR THE INTENT OF THE DRAWINGS AND SPECIFICATIONS, HE SHALL NOTIFY THE ENGINEER AND SHALL NOT PROCEED WITH HIS WORK UNTIL HE HAS RECEIVED INSTRUCTIONS FROM THE ENGINEER.

1.05 CODES AND STANDARDS:

A. THE STANDARDS AND CODES LISTED BELOW SHALL APPLY TO ALL MECHANICAL WORK. WHERE STANDARDS OR CODES ARE MENTIONED IN THESE SPECIFICATIONS, THE LATEST EDITION OR REVISION SHALL BE FOLLOWED.
1. ANSI A13.1– SCHEME FOR THE IDENTIFICATION OF PIPING SYSTEM
2. ANSI A40.8 – NATIONAL PLUMBING CODES
3. ANSI C 1 – NATIONAL ELECTRIC CODE (NFPA 70)
4. ANSI C50 – ROTATING ELECTRICAL MACHINERY
5. ANSI C51.1– CONSTRUCTION AND GUIDE FOR SELECTION, INSTALLATION F
6. ANSI C52.1– MOTORS AND GENERATORS (NEMA MG 1)

B. STATE AND LOCAL CODES SHALL APPLY AS LIST ON COVER SHEET.

C. THE FOLLOWING ABBREVIATIONS ARE USED WITHIN THIS SECTION OF THE SPECIFICATIONS:

ACPA – AMERICAN CONFERENCE OF GOVERNMENTAL INDUSTRIAL HYGIENISTS
AMCA – AIR MOVING AND CONDITIONING ASSOCIATION
ANSI – AMERICAN NATIONAL STANDARDS INSTITUTE
API – AMERICAN PETROLEUM INSTITUTE
ARI – AIR CONDITIONING AND REFRIGERATION INSTITUTE
ASHRAE– AMERICAN SOCIETY OF HEATING REFRIGERATION AND AIR CONDITIONING ENGINEERS
ASME – AMERICAN SOCIETY OF MECHANICAL ENGINEERS
ASTM – AMERICAN SOCIETY OF TESTING AND MATERIALS
AWS – AMERICAN WELDING SOCIETY
AWWA – AMERICAN WATER WORKS ASSOCIATION
BOCA – BUILDING OFFICIALS AND CODE ADMINISTRATORS INTERNATIONAL, INC.
CGA – COMPRESSED GAS ASSOCIATION
CISPI – CAST IRON SOIL PIPE INSTITUTE
EJMA – EXPANSION JOINT MANUFACTURERS ASSOCIATION
EPA – ENVIRONMENTAL PROTECTION AGENCY
FSSC – FEDERAL SPECIFICATION
IBR – INSTITUTE OF BOILER AND RADIATOR MANUFACTURERS
IEEE – INSTITUTE OF ELECTRICAL AND ELECTRICAL ENGINEERS
NEMA – NATIONAL ELECTRICAL MANUFACTURER ASSOCIATION
NFPA – NATIONAL FIRE PROTECTION ASSOCIATION
NOFI – NATIONAL OIL FUEL INSTITUTE
NSPC – NATIONAL STANDARD PLUMBING CODE
OSHA – OCCUPATIONAL SAFETY AND HEALTH ADMINISTRATION
PDI – PLUMBING AND DRAINAGE INSTITUTE
SMACNA – SHEET METAL AND AIR CONDITIONING CONTRACTORS NATIONAL ASSOCIATION
U.L. – UNDERWRITERS' LABORATORIES

1.06 PERMITS AND FEES:
A. THE CONTRACTOR SHALL GIVE ALL NECESSARY NOTICES, OBTAIN ALL PERMITS AND PAY ALL GOVERNMENT SALES TAXES AND FEES WHERE APPLICABLE, AND OTHER COSTS, INCLUDING UTILITY CONNECTIONS OR EXTENSIONS, IN CONNECTION WITH HIS WORK, FILE ALL NECESSARY APPROVALS OF ALL GOVERNMENTAL DEPARTMENTS HAVING JURISDICTION, OBTAIN ALL REQUIRED CERTIFICATES OF INSPECTION FOR HIS WORK AND DELIVER A COPY TO THE ENGINEER BEFORE REQUEST FOR ACCEPTANCE AND FINAL PAYMENT FOR THE WORK.
B. THE CONTRACTOR SHALL INCLUDE IN THE WORK, WITHOUT EXTRA COST TO THE OWNER, ANY LABOR, MATERIALS, SERVICES, APPARATUS, DRAWINGS, IN ORDER TO COMPLY WITH ALL APPLICABLE LAWS, ORDINANCES RULES AND REGULATIONS, WHETHER OR NOT SHOWN ON DRAWINGS AND/OR SPECIFIED.
C. ALL MATERIALS FURNISHED AND ALL WORK INSTALLED SHALL COMPLY WITH RULES AND RECOMMENDATIONS OF THE NATIONAL FIRE PROTECTION ASSOCIATION, WITH THE REQUIREMENTS OF THE LOCAL UTILITY COMPANIES, WITH THE RECOMMENDATIONS OF THE INSURING AUTHORITY, AND WITH THE REQUIREMENTS OF ALL GOVERNMENTAL DEPARTMENTS HAVING JURISDICTION.

1.07 COORDINATION WITH OTHER DIVISIONS:
A. ALL WORK SHALL BE CARRIED OUT IN CONJUNCTION WITH OTHER TRADES AND FULL COOPERATION SHALL BE IN ORDER THAT ALL WORK MAY PROCEED WITH A MINIMUM OF DELAY AND INTERFERENCE. PARTICULAR EMPHASIS PLACED ON TIMELY INSTALLATION OF MAJOR APPARATUS AND FURNISHING OTHER CONTRACTORS, ESPECIALLY THE GENERAL CONTRACTOR, WITH INFORMATION AS TO OPENINGS, CHASES, EQUIPMENT LOCATIONS, PANELS WIRING REQUIRED BY OTHER TRADES.
B. THE CONTRACTOR IS REQUIRED TO EXAMINE ALL OF THE PROJECT DRAWING AND MUTUALLY ARRANGE WORK SO AS TO AVOID INTERFERENCE. DUCTWORK, HEATING PIPES AND DRAINAGE LINES TAKE PRECEDENCE OVER WATER, GAS AND ELECTRICAL CONDUITS.
C. WHERE THE WORK OF THE CONTRACTOR WILL BE INSTALLED IN CLOSE PROXIMITY TO, OR WILL INTERFERE WITH WORK OF OTHER TRADES, HE SHALL ASSIST IN WORKING OUT SPACE CONDITIONS TO MAKE A SATISFACTORY ADJUSTMENT. IF SO DIRECTED BY THE ENGINEER, THE CONTRACTOR SHALL PREPARE COMPOSITE WORKING DRAWINGS AND SECTIONS AT A SCALE NOT LESS THAN 3/8" = 1' – 0", CLEARLY SHOWING HOW HIS WORK IS TO BE INSTALLED IN RELATION TO THE WORK OF OTHER TRADES. IF THE CONTRACTOR INSTALLS HIS WORK BEFORE COORDINATING WITH OTHER TRADES, HE SHALL MAKE NECESSARY CHANGES IN HIS WORK TO CORRECT THE CONDITION WITHOUT EXTRA CHARGE. CONTRACTORS SHALL COORDINATE RADIATION COVERS WITH CONVENIENCE OUTLETS TO AVOID CONFLICTS.

1.08 APPROVALS:
A. THE MATERIALS, WORKMANSHIP, DESIGN AND ARRANGEMENT OF ALL WORK SHALL BE SUBJECT TO THE APPROVAL OF THE ENGINEER.
B. WITHIN THIRTY (30) DAYS AFTER THE ACCEPTANCE OF BIDS, THE MECHANICAL CONTRACTOR SHALL SUBMIT TO THE ENGINEER FOR APPROVAL A LIST OF MANUFACTURERS OF EQUIPMENT PROPOSED FOR THE WORK UNDER THE MECHANICAL SECTION. THE INTENT TO USE THE EXACT MAKES SPECIFIED DOES NOT RELIEVE THE CONTRACTOR OF THE RESPONSIBILITY OF SUBMITTING SUCH A LIST.
C. WHERE ANY SPECIFIC MATERIAL, PROCESS OR METHOD OF CONSTRUCTION, OR MANUFACTURED ARTICLE IS SPECIFIED BY NAME OR BY REFERENCE TO THE CATALOGUE NUMBER OF A MANUFACTURER, THE SPECIFICATIONS ARE TO BE USED AS A GUIDE AND ARE NOT INTENDED TO TAKE PRECEDENCE OVER THE BASIC DUTY AND PERFORMANCE SPECIFIED WITH THE SPECIFIC CHARACTERISTICS OF THE EQUIPMENT OFFERED FOR APPROVAL. EQUIPMENT CHARACTERISTICS ARE TO BE USED AS MANDATORY REQUIREMENTS WHERE CONTRACTOR PROPOSES TO USE AN APPROVED EQUAL.
D. ALL COMPONENT PARTS OF EACH ITEM OF EQUIPMENT OR DEVICE SHALL BEAR THE MANUFACTURER'S NAMEPLATE, GIVING NAME OF MANUFACTURER, DESCRIPTION, SIZE, TYPE, SERIAL OR MODEL NUMBER, ELECTRICAL CHARACTERISTICS, ETC., IN ORDER TO FACILITATE MAINTENANCE OR REPLACEMENT. THE NAMEPLATE OF SUBCONTRACTOR OR DISTRIBUTOR WILL NOT BE ACCEPTABLE.
E. IF MATERIAL OR EQUIPMENT IS INSTALLED BEFORE IT IS APPROVED, THE CONTRACTOR SHALL BE LIABLE FOR ITS REMOVAL AND REPLACEMENT AT NO EXTRA CHARGE TO THE OWNER IF, IN THE OPINION OF THE ENGINEER, THE MATERIAL OR EQUIPMENT DOES NOT MEET THE INTENT OF THE DRAWINGS AND SPECIFICATIONS.

1.09 EQUIPMENT DEVIATIONS:

A. BIDS SHALL BE BASED ON MATERIAL AND EQUIPMENT SPECIFIED. WHERE MORE THAN ONE MANUFACTURER IS NAMED IN THE PLANS OR SPECIFICATIONS, EQUIPMENT OR MATERIALS SHALL BE EQUAL TO THE MODEL OR TYPE SPECIFIED, BUT MAY BE THE PRODUCT OF ANY OF THE MANUFACTURERS LISTED FOR THE PARTICULAR ITEM. IF IT IS DESIRED TO SUBSTITUTE THE PRODUCT OF A MANUFACTURER NOT SPECIFIED A PARTICULAR ITEM, THE MANUFACTURER AND ITEM TO BE SUBSTITUTED SHALL BE NAMED ON THE BID FORM TOGETHER WITH THE ADDITION OR DEDUCTION OF THE BASE BID. BASE BID SHALL BE BASED ON USING MANUFACTURER'S EQUIPMENT AS SPECIFIED.
B. IN THESE SPECIFICATIONS AND ON THE ACCOMPANYING DRAWINGS, ONE OR MORE MAKES OF MATERIALS, APPARATUS OR APPLIANCE HAVE BEEN SPECIFIED FOR USE IN THIS INSTALLATION. THIS HAS BEEN DONE FOR CONVENIENCE IN FIXING THE STANDARD OF WORKMANSHIP, FINISH AND DESIGN REQUIRED FOR THIS WORKMANSHIP, FINISH AND DESIGN AND THE GUARANTEED PERFORMANCE OF ANY MATERIALS, APPARATUS OR APPLIANCE WHICH THE CONTRACTOR DESIRES TO SUBSTITUTE FOR THOSE MENTIONED STANDARDS. WHERE NO SPECIFIC MAKE OF MATERIAL, APPARATUS OR APPLIANCE IS MENTIONED, ANY FIRST CLASS PRODUCT MADE BY REPUTABLE MANUFACTURER MAY BE USED, PROVIDING IT CONFORMS TO THE REQUIREMENTS OF THESE SPECIFICATIONS, IN THE OPINION OF AND MEETS THE APPROVAL OF THE ENGINEER. WHERE TWO OR MORE NAMES ARE GIVEN AS EQUALS, THE CONTRACTOR MUST USE ONE OF THE NAMED EQUALS. WHERE ONE NAME ONLY IS USED AND IS FOLLOWED BY THE WORD "OR APPROVED EQUAL" THE CONTRACTOR MUST USE THE ITEM NAMED, BUT HE MAY APPLY FOR SUBSTITUTION THROUGH THE PRESCRIBED MANNER.
C. WHERE THE CONTRACTOR PROPOSES TO USE AN ITEM OF EQUIPMENT OTHER THAN SPECIFIED OF DETAILED ON THE DRAWINGS WHICH REQUIRES ANY REDESIGN OF THE STRUCTURE, PARTITIONS, FOUNDATIONS WIRING, OR ANY OTHER PART OF THE MECHANICAL, ELECTRICAL OR DESIGNERURAL LAYOUT, ALL SUCH REDESIGN AND ALL NEW DRAWINGS AND DETAILING REQUIRED THEREFORE SHALL WITH THE APPROVAL OF THE ENGINEER, BE PREPARED UNDER WORK OF THE RESPECTIVE SECTION AT NO COST TO THE OWNER.
D. WHERE SUCH APPROVED DEVIATION REQUIRES A DIFFERENT QUANTITY AND ARRANGEMENT OF DUCTWORK, PIPING, WIRING, CONDUIT AND EQUIPMENT FROM THAT SPECIFIED OR INDICATED ON THE DRAWINGS, WITH THE APPROVAL OF THE ENGINEER, THE CONTRACTOR SHALL FURNISH AND INSTALL ANY SUCH DUCTWORK, PIPING, STRUCTURAL SUPPORTS, INSULATION, CONTROLLERS, MOTORS, STARTERS, AND ANY OTHER ADDITIONAL EQUIPMENT REQUIRED BY THE SYSTEM AT NO ADDITIONAL COST TO THE OWNER.

1.10 MANUFACTURER'S IDENTIFICATION:

A. MANUFACTURER'S NAMEPLATE, NAME OR TRADEMARK AND ADDRESS SHALL BE ATTACHED PERMANENTLY TO ALL EQUIPMENT AND MATERIAL FURNISHED UNDER THIS DIVISION. THE NAMEPLATE OF A CONTRACTOR OR DISTRIBUTOR SHALL NOT BE ACCEPTABLE.

1.11 SHOP DRAWINGS:
A. CONTRACTOR SHALL SUBMIT FOR REVIEW, DETAILED SHOP DRAWINGS OF ALL EQUIPMENT AND ALL MATERIAL REQUIRED TO COMPLETE THE PROJECT. NO MATERIAL OR EQUIPMENT MAY BE DELIVERED TO THE SITE OR INSTALLED UNTIL THE CONTRACTOR HAS IN HIS POSSESSION AN APPROVED SHOP DRAWING FOR THE PARTICULAR MATERIAL OR EQUIPMENT.
B. SHOP DRAWINGS SHALL BE SUBMITTED IN ACCORDANCE WITH THE REQUIREMENT OUTLINED IN THE GENERAL CONDITIONS OF THESE SPECIFICATIONS.
C. FAILURE OF THE CONTRACTOR TO SUBMIT SHOP DRAWINGS IN AMPLE TIME SHALL NOT ENTITLE HIM TO AN EXTENSION OF CONTRACT TIME AND NO CLAIM FOR EXTENSION BY REASON OF SUCH DEFAULT TO BE ALLOWED.
D. CATALOGUES, PAMPHLETS OR OTHER DOCUMENTS SUBMITTED TO DESCRIBED ITEMS ON WHICH APPROVAL IS REQUESTED, SHALL BE SPECIFIC AND IDENTIFICATION IN CATALOGUE, PAMPHLET, ETC. OF ITEM SUBMITTED SHALL BE CLEARLY MADE IN INK. DATA OF GENERAL NATURE WILL NOT BE ACCEPTED.
E. THE CONTRACTOR SHALL FURNISH ALL NECESSARY TEMPLATES, PATTERNS, ETC. FOR INSTALLATION WORK AND FOR THE PURPOSE OF MAKING ADJOINING WORK CONFORM, FURNISH SETTING PLANS AND SHOP DETAILS TO OTHER TRADES AS REQUIRED.
F. APPROVAL RENDERED ON SHOP DRAWINGS SHALL NOT BE CONSIDERED AS A GUARANTEE OF MEASUREMENTS OR BUILDING CONDITIONS. WHERE DRAWINGS ARE APPROVED, APPROVAL DOES NOT MEAN THAT DRAWINGS HAVE BEEN CHECKED IN DETAIL; SAID APPROVAL DOES NOT IN ANY WAY RELIEVE THE CONTRACTOR FROM HIS RESPONSIBILITY, OR NECESSITY IF FURNISHING MATERIAL OR PERFORMING WORK AS REQUIRED BY THE CONTRACT DRAWINGS AND SPECIFICATIONS. VERIFY AVAILABLE SPACE PRIOR TO SUBMITTING SHOP DRAWINGS.
G. APPROVAL OF SHOP DRAWINGS SHALL NOT APPLY TO QUANTITY NOR RELIEVE CONTRACTOR OF HIS RESPONSIBILITY TO COMPLY WITH INTENT OF DRAWINGS AND SPECIFICATIONS. APPROVAL OF SHOP DRAWINGS ARE FINAL AND NO FURTHER CHANGES WILL BE ALLOWED WITHOUT THE WRITTEN CONSENT OF THE ENGINEER.

1.12 MATERIAL AND WORKMANSHIP:
A. ALL MATERIALS AND APPARATUS REQUIRED FOR THE WORK, EXCEPT AS SPECIFIED OTHERWISE, SHALL BE NEW, OF FIRST CLASS QUALITY AND SHALL BE FURNISHED, DELIVERED, CONNECTED AND FINISHED IN EVERY DETAIL AND SHALL BE SO SELECTED AND ARRANGED TO FIT PROPERLY INTO THE BUILDING SPACE. WHERE NO SPECIFIC KIND OF QUALITY OR MATERIAL IS GIVEN, A FIRST-CLASS STANDARD ARTICLE AS ACCEPTED BY THE ENGINEER, SHALL BE FURNISHED.
B. THE CONTRACTOR SHALL FURNISH THE SERVICES OF AN EXPERIENCED SUPERINTENDENT WHO SHALL BE CONSTANTLY IN CHARGE OF THE INSTALLATION OF THE WORK, TOGETHER WITH ALL SKILLED WORKMEN, FITTERS, METAL WORKERS, WELDERS, HELPERS, AND LABOR REQUIRED TO UNLOAD, TRANSFER, ERECT, CONNECT-UP, ADJUST, START, OPERATE AND TEST EACH SYSTEM.
C. UNLESS OTHERWISE SPECIFICALLY INDICATED ON THE PLANS OR SPECIFICATIONS, ALL EQUIPMENT AND MATERIALS SHALL BE INSTALLED WITH THE ACCEPTANCE OF THE ENGINEER IN ACCORDANCE RECOMMENDATIONS OF THE MANUFACTURER. THIS INCLUDES THE PERFORMANCE OF SUCH TESTS AS THE MANUFACTURER RECOMMENDS.

1.13 PROTECTION:

A. WORK UNDER THIS SECTION SHALL INCLUDE PROTECTING THE WORK AND MATERIALS OF ALL OTHER SECTIONS FROM DAMAGE BY WORK OR WORKMEN, AND SHALL INCLUDE MAKING GOOD ALL DAMAGE US CAUSED.
B. THE CONTRACTOR SHALL BE RESPONSIBLE FOR WORK AND EQUIPMENT UNTIL FINALLY INSPECTED, TESTED AND ACCEPTED; PROTECT WORK AGAINST THEFT, INJURY OR DAMAGE; AND CAREFULLY STORE MATERIAL AND EQUIPMENT RECEIVED ON SITE WHICH ARE NOT IMMEDIATELY INSTALLED. CLOSE OPEN ENDS OF WORK WITH TEMPORARY COVERS OR PLUGS DURING CONSTRUCTION TO PREVENT ENTRY OF OBSTRUCTING MATERIAL.
C. WORK UNDER THIS SECTION, INCLUDES RECEIVING, UNLOADING, UNCRATING, STORING, PROTECTING, SETTING IN PLACE AND CONNECTING UP COMPLETELY OF EQUIPMENT SUPPLIED UNDER THIS SECTION. WORK UNDER THIS SECTION SHALL ALSO INCLUDE EXERCISING SPECIAL CARE IN HANDLING AND PROTECTING EQUIPMENT AND FIXTURES AND SHALL INCLUDE THE COST OF REPLACING ANY OF THE ABOVE EQUIPMENT AND FIXTURES WHICH MISSING OR DAMAGED BY REASON OF MISHANDLING OR FAILURE TO PROTECT ON THE PART OF THE CONTRACTOR.

1.14 SLEEVES, INSERTS AND ANCHOR BOLTS:

A. THE CONTRACTOR SHALL PROVIDE, SET IN PLACE AND BE HELD RESPONSIBLE FOR THE LOCATION OF ALL SLEEVES, INSERTS, AND ANCHOR BOLTS REQUIRED FOR THEIR WORK. IN THE EVENT THAT FAILURE TO DO SO REQUIRES CUTTING AND PATCHING OF FINISHED WORK, IT SHALL BE DONE AT THE CONTRACTOR'S EXPENSE.
B. ALL PIPES AND CONDUITS PASSING THROUGH FLOORS, WALLS, OR PARTITIONS, SHALL BE PROVIDED WITH SLEEVES HAVING AN INTERNAL DIAMETER 1 INCH LARGER THAN THE OUTSIDE DIAMETER OF THE PIPE, CONDUIT OR INSULATION, ENCLOSING PIPE OR CONDUIT.
C. SLEEVES THROUGH OUTSIDE WALLS SHALL BE CAST IRON SLEEVES WITH IMMEDIATE INTEGRAL FLANGE. SLEEVES SHALL BE SET WITH ENDS FLUSH WITH EACH FACE OF WALL. THE SPACE BETWEEN SLEEVE AND PIPE SHALL BE PACKED WITH OAKUM TO WITH TWO (2) INCHES OF EACH FACE OF WALL. THE REMAINING SPACE SHALL BE PACKED AND MADE WATERTIGHT WITH A WATERPROOF COMPOUND.
D. SLEEVES THROUGH CONCRETE FLOORS OR INTERIOR MASONRY WALLS SHALL BE SCHEDULE 40 BLACK STEEL PIPE, SST FLUSH WITH FINISHED WALL OR CEILING SURFACES, BUT EXTENDING TWO (2) INCHES ABOVE FINISHED FLOORS.
E. SLEEVES THROUGH INTERIOR PARTITIONS SHALL BE 22 GAUGE GALVANIZED SHEET STEEL, SET FLUSH WITH FINISHED SURFACES OF PARTITIONS.
F. INSERTS SHALL BE INDIVIDUAL OR STRIP TYPE OR PRESSED STEEL CONSTRUCTION WITH ACCOMMODATION FOR REMOVAL NUTS AND THREADED RODS UP TO 3/4" DIAMETER, PERMITTING LATERAL ADJUSTMENT. INDIVIDUAL INSERTS SHALL HAVE AN OPENING AT THE TOP TO ALLOW REINFORCING RODS UP TO ½" DIAMETER TO BE PASSED THROUGH THE INSERT BODY. STRIP INSERTS SHALL HAVE ATTACHED RODS HAVING HOOKED ENDS TO ALLOW FASTENING TO REINFORCING RODS. INSERTS SHALL BE AS MANUFACTURED BY CARPENTER AND PATTERSON, INC., GRINNEL CO., INC. OR APPROVED EQUAL.

1.15 NOT USED

1.33 RECORD DRAWINGS:

A. MAINTAIN AT THE JOB SITE A RECORD SET OF MECHANICAL DRAWINGS ON WHICH CHANGES IN LOCATION OF EQUIPMENT, PIPING, DUCTS, VALVES, CLEANOUTS, PANELS AND MAJOR CONDUITS SHALL BE RECORDED THESE SHALL BE CLEARLY MARKED ON A CLEAN SET OF SEPIA AT THE COMPLETION OF WORK AND TURN OVER TO THE ENGINEER.

END OF SECTION 15010

DIVISION 15 – MECHANICAL PLUMBING
SECTION 15400 – PLUMBING

PART 1.00 – GENERAL PROVISION

1.01 THE CONTRACTOR FOR WORK UNDER THIS SECTION IF REFERRED TO THE:

CONTRACT DRAWINGS, GENERAL CONDITIONS, CONTRACT SPECIFICATIONS, ALL OF WHICH ARE HEREBY MADE A PART OF THIS SECTION.

1.02 THE CONTRACTOR'S PARTICULAR ATTENTION IS DIRECTED TO THE "GENERAL:

NOTES", AND THE REQUIREMENT TO STRICTLY COMPLY WITH ALL THE PROVISIONS OF SAME.

1.03 WORK INCLUDED:

A. PROVIDE ALL LABOR, MATERIALS, EQUIPMENT, SERVICES, ETC., NECESSARY OR REQUIRED FOR THE WORK OF THIS SECTION, AS INDICATED ON THE DRAWINGS, HEREIN SPECIFIED, AND IN ACCORDANCE WITH THE REQUIREMENTS OF THE CONTRACT DOCUMENTS. ITEMS OF WORK SHALL CONSIST GENERALLY OF, BUT NOT BE LIMITED TO THE FOLLOWING:
1. SANITARY PIPING ABOVE AND BELOW GRADE.
2. SANITARY VENT PIPING.
3. DOMESTIC HOT AND COLD WATER PIPING.
4. NATURAL GAS PIPING (IF REQUIRED).
5. ALL VALVES, FITTINGS AND DEVICES ASSOCIATED WITH PIPING SYSTEMS.
6. PIPE INSULATION.
7. WATER HEATER
8. BACKFLOW PREVENTER.
9. PLUMBING FIXTURES AND FAUCETS.
10. STOP VALVES.
11. FLOOR DRAINS.
12. ROOF DRAINS (IF REQUIRED)
13. DOMESTIC WATER SERVICE.
14. CONNECTIONS TO EQUIPMENT FURNISHED BY OTHERS.
15. CONDENSATE DRAINS.
16. INDIRECT WASTE DRAINS.
17. TESTING.
18. FURNISHING AND SETTING OF ALL SLEEVES THROUGH THE FLOORS, ROOF AND WALL, WHERE REQUIRED INCLUDING WATERPROOFING AND FIREPROOF SEALING AND CAP FLASHING.
19. NOT USED.
20. HARDWARE, SUCH AS INSERTS, BOLTS, ETC., ASSOCIATED WITH CONCRETE PADS.
21. CUTTING ASSOCIATED WITH PLUMBING.
22. PRIME PAINTING, WHERE REQUIRED FOR PLUMBING EQUIPMENT AND INSTALLATION.

1.04 RELATED WORK OF OTHER SECTIONS:
A. THE CONTRACTOR WILL BE REQUIRED TO COORDINATE THE RELATED WORK SECTIONS WITH THE WORK OF THIS SECTION AND BE RESPONSIBLE FOR THE TIMELY AND EXPEDITIOUS PERFORMANCE OF SAME. RELATED WORK SHALL INCLUDE BUT IS NOT NECESSARILY LIMITED TO THE FOLLOWING:
1. FINISHED PAINTING EXCEPT AS NOTED.
2. ELECTRICAL POWER WIRING, AND SETTING OF STARTERS.
3. GAS VENTS BY MECHANICAL CONTRACTOR.

1.05 VERIFYING CONDITIONS:
A. EXAMINE ALL DRAWINGS COVERING THE WORK OF THIS SECTION AND REFER TO ALL OTHER DRAWINGS, INCLUDING DESIGNERURAL, MECHANICAL AND ELECTRICAL DRAWINGS, WHICH MAY AFFECT THE WORK OF THE SECTION OR REQUIRE COORDINATING WITH SAME.
B. REPORT IN WRITING TO THE DESIGNER ANY AND ALL CONDITIONS WHICH MAY INTERFERE OR OTHERWISE AFFECT OR PREVENT THE PROPER EXECUTION AND COMPLETION OF THE WORK.

1.06 SUBMITTALS:

A. SHOP DRAWINGS:
1. PRIOR TO PURCHASING ANY EQUIPMENT OR MATERIALS, A LIST OF THEIR MANUFACTURERS SHALL BE SUBMITTED FOR APPROVAL.
2. PRIOR TO ASSEMBLING OR INSTALLING THE WORK, THE FOLLOWING SHALL BE SUBMITTED FOR APPROVAL:
a. PLUMBING FIXTURES & TRIM.
b. PIPE INSULATION.
c. FLOOR DRAINS
d. GAS VENT MATERIALS.
e. FLOOR SINKS
f. CLEANOUTS.
3. DOCUMENTS WILL NOT BE ACCEPTED FOR APPROVAL UNLESS:
a. FIVE COPIES OF EACH ARE SUBMITTED.
b. ALL REQUIRED CERTIFICATES ARE SUBMITTED WITH APPROVAL.
c. ALL SUBMITTALS CLEARLY MARKED.

1.08 FEES, PERMITS AND CERTIFICATES:

A. ALL FEES, PERMITS, TAXES OR CERTIFICATES REQUIRED BY GOVERNING BODIES OR ANY OTHER AGENCY AFFECTING THE WORK AS SPECIFIED HEREIN, OR REQUIRED FOR THE CERTIFICATE OF OCCUPANCY, SHALL BE OBTAINED AND PAID FOR BY THIS CONTRACTOR AS PART OF THE BASIC CONTRACT.

1.09 REMOVAL OF DEBRIS:

A. THIS CONTRACTOR SHALL REMOVE FROM THE BUILDING ALL SURPLUS MATERIALS AND ALL DEBRIS CREATED BY HIM AND SHALL LEAVE THE WORK AREA IN A CLEAN CONDITION.

1.10 CUTTING AND PATCHING:

A. CUTTING AND DRILLING: CONTRACTOR SHALL DO ALL CUTTING AND DRILLING OF WALLS, PARTITIONS, CEILING, FLOORS, ETC., AS NECESSARY FOR INSTALLATION OF THE NEW WORK, INCLUDING CUTTING OF HOLES AND OTHER OPENINGS FOR NEW WORK. CUTTING SHALL BE PERFORMED BY HAND OR SMALL POWER TOOLS; HOLES AND SLOTS CUT NEAT AND TO SIZE REQUIRED, WITH MINIMUM DISTURBANCE OF ADJACENT WORK; CUT HOLES IN CONCRETE SLABS FOR PIPES WITH CORE DRILLS OF PROPER SIZES. WHERE HOLES ARE CUT IN FLOORS, THE UNDERSIDE SHALL BE DUSTPROOFED TO CATCH ANY DEBRIS AND DUST WHICH MAY RESULT FROM THESE OPERATIONS AND TO PROTECT PERSONS FROM DAMAGES OR INJURIES. OPENINGS SHALL BE COVERED TEMPORARILY WHEN NOT IN USE AND PATCHED AS SOON AS WORK IS INSTALLED.
B. PATCHING AND REPAIRS:
1. SURFACES AFFECTED BY PATCHING AND REPAIRING WORK SHALL BE RESTORED TO MATCH EXISTING ADJACENT SURFACES. WHERE WATERPROOF FLOORS ARE CUT, THIS CONTRACTOR SHALL PATCH AND REPAIR FLOORS IN SUCH A MANNER AS TO RESTORE THE ORIGINAL WATERPROOF CONDITION, AND AS DIRECTED BY THE DESIGNER.
C. RE-EXAMINATION AND COVERING UP OF WORK:
1. RE-EXAMINATION OF QUESTIONED WORK MAY BE ORDERED BY THE DESIGNER, AND IF SO ORDERED, SUCH PART OF THE WORK MUST BE UNCOVERED BY THE CONTRACTOR. IF SUCH PART OF THE WORK BE FOUND IN ACCORDANCE WITH THE CONTRACT DOCUMENTS, THE OWNER SHALL PAY THE COST OF RE-EXAMINATION AND REPLACEMENT IF SUCH PART OF THE WORK BE FOUND NOT IN ACCORDANCE WITH THE CONTRACT DOCUMENTS, THE CONTRACTOR SHALL PAY SUCH COST AND ALSO THE COST OF RESTORING THE WORK OF ANY OTHER CONTRACTOR DAMAGED OR REMOVED. IF ANY PART OF THE WORK OF THE CONTRACTOR OR OF HIS SUBCONTRACTORS BE COVERED UP BY THE DESIGNER WITHOUT APPROVAL OR CONSENT OF THE ENGINEER, SUCH WORK MUST, UPON REQUEST OF THE DESIGNER BE UNCOVERED AND RESTORED TO THE SATISFACTION OF THE ENGINEER AT THE EXPENSE OF THE CONTRACTOR.

1.11 VISITING THE PREMISES:

A. THIS CONTRACTOR, BEFORE SUBMITTING HIS BID ON THE WORK, MUST VISIT THE SITE AND FAMILIARIZE HIMSELF WITH ALL VISIBLE EXISTING CONDITIONS. AS A RESULT OF HAVING VISITED PREMISES, THIS CONTRACTOR SHALL BE RESPONSIBLE FOR THE INSTALLATION OF THE WORK AS IT RELATES TO SUCH VISIBLE EXISTING CONDITIONS.

END OF SECTION 15400

DIVISION 15 – MECHANICAL / PLUMBING
SECTION 15410 – PLUMBING PIPING

PART 1.00 – GENERAL

1.01 RELATED DOCUMENTS:

A. THIS SECTION COORDINATES WITH AND IS COMPLEMENTARY TO THE GENERAL CONDITIONS, SUPPLEMENTARY GENERAL CONDITIONS AND THE GENERAL REQUIREMENTS, WHEREVER APPLICABLE TO MECHANICAL WORK.
B. SECTION 15010 – SPECIAL REQUIREMENTS FOR MECHANICAL WORK.

1.02 DESCRIPTION OF WORK
A. THE WORK INCLUDES THE PROVIDING OF ALL LABOR, MATERIALS, EQUIPMENT, ACCESSORIES, SERVICES AND TESTS NECESSARY TO COMPLETE AND MAKE READY FOR OPERATION BY THE OWNER; PLUMBING PIPING IN ACCORDANCE WITH DRAWINGS AND SPECIFICATIONS.

1.03 QUALITY ASSURANCE:

A. MANUFACTURERS: FIRMS REGULARLY ENGAGED IN THE MANUFACTURER OF EQUIPMENT OF THE TYPES AND CAPACITIES REQUIRED, WHOSE PRODUCTS HAVE BEEN IN SATISFACTORY USE IN SIMILAR SERVICE FOR NOT LESS THAN 5 YEARS.
B. THE EQUIPMENT SHALL BE DESIGNED, ASSEMBLED AND TESTED IN ACCORDANCE WITH APPLICABLE STANDARDS AS INDICATED IN SECTION 15010 AND SHALL BE LISTED AND LABELED BY UNDERWRITERS LABORATORIES.
C. PROVIDE EQUIPMENT PRODUCED BY A MANUFACTURER LISTED AS AN APPROVED MANUFACTURER IN THIS SECTION OR ON THE DRAWING SCHEDULES.
D. PROVIDE EQUIPMENT WHOSE PERFORMANCE UNDER SPECIFIED CONDITION, IS CERTIFIED BY THE MANUFACTURER.

1.04 GUARANTEE:

A. REFER TO SECTION 15010 – SPECIAL REQUIREMENTS FOR MECHANICAL WORK.

PART 2.00 – PRODUCTS

2.01 GENERAL:

A. ALL PIPE SHALL BE NEW, FREE FROM SCALE OR RUST, AND OF THE MATERIAL AND WEIGHT SPECIFIED UNDER THE VARIOUS SERVICES. EACH LENGTH OF PIPE SHALL BE PROPERLY MARKED AT THE MILL FOR PROPER IDENTIFICATION WITH NAME OR SYMBOL OF MANUFACTURER.

2.02 SANITARY & STORM DRAINAGE:

A. ABOVE GROUND SANITARY WASTE, VENT AND ROOF DRAIN PIPING SHALL SERVICE WEIGHT CAST IRON, NO-HUB TYPE. UNDERGROUND SANITARY AND DRAIN PIPING EXTRA HEAVY SHALL BE CAST IRON HUB AND SPIGOT TYPE WITH NEOPRENE JOINTS WITH RESTRAINT.
B. CLEANOUTS FOR SANITARY AND STORM DRAINAGE SYSTEMS SHALL BE LOCATED IN ACCORDANCE WITH THE PLUMBING CODE REFERENCED IN PARAGRAPH 1.05 OF SECTION 15010.
C. PROVIDE: TAP IN FLOOR DRAIN TRAPS TO RECEIVER TRAP PRIMER DISCHARGE.
D. ALL VENT PENETRATIONS THROUGH BUILDING ROOF SHALL BE MADE WATERTIGHT BY THE USE OF PROPER FLASHING MATERIALS. SUBMIT FLASHING DETAILS FOR APPROVAL BY THE DESIGNER.

E. CONTRACTOR MAY SUBMIT DEDUCT ALTERNATE FOR INSTALLATION OF SANITARY WASTE PIPING, ONLY, IN SCHEDULE 40 PVC, FOR BELOW SLAB AND ABOVE SLAB, TO CEILING HEIGHT ONLY.

"NO PVC PIPING SHALL BE ALLOWED IN RETURN AIR PLENUM"

2.03 DOMESTIC WATER:

A. DOMESTIC COLD AND HOT WATER PIPING SHALL BE TYPE "L" COPPER FITTINGS SHALL BE WROUGHT COPPER, 95%-5% ANTIMONY/TIN SOLDER SHALL BE USED.
B. ALL POTABLE WATER PIPING SHALL BE DISINFECTED IN ACCORDANCE WITH LOCAL PLUMBING CODE INDICATED IN PARAGRAPH 1.05 OF SECTION 15010 AND IN ACCORDANCE WITH THE REQUIREMENTS OF THE LOCAL HEALTH DEPARTMENT.
C. PROVIDE STOP VALVES FOR ALL DOMESTIC WATER CONNECTIONS TO FIXTURES EXCEPT WHERE INTEGRAL STOPS ARE PROVIDED, OR GATE VALVES ARE INDICATED ON THE DRAWINGS.
D. ALL HOSE BIBS AND HYDRANTS SHALL BE PROVIDED WITH APPROVED VACUUM BREAKERS.
E. PROVIDE CHROME PLATED, BRASS ANGLED STOP VALVES FOR ALL LAVATORIES, SINKS, ETC.
F. DISCHARGE OF ALL RELIEF VALVES SHALL BE PIPED TO WITHIN 6" OF THE FLOOR TO PREVENT ACCIDENTAL SCALDING.

2.04 NATURAL GAS:

A. COORDINATE THE LOCATION OF GAS METER (S) WITH THE LOCAL GAS COMPANY.
B. GAS SYSTEM SHALL BE SCHEDULE 40 BLACK STEEL WITH MALLEABLE IRON FITTINGS. VALVE SHALL BE LUBRICATED PLUG TYPE, SIMILAR TO CRANE #250.
C. PROVISIONS SHALL BE MADE FOR EXPANSION AND CONTRACTION OF GAS PIPING.
D. PIPING SHALL BE SLOPED NOT LESS THAN 1/4 INCH IN 15 FEET. HORIZONTAL LINES SHALL SLOPE UPWARD TO RISERS AND FROM RISERS TO THE METER, OR SERVICE REGULATOR OR TO THE EQUIPMENT. DRIPS SHALL BE PROVIDED AT SUCH POINTS TO ACT AS STORAGE FOR CONDENSATE. DRIPS SHALL BE ACCESSIBLE AND SHALL NOT BE LOCATED WHERE THE CONDENSATE IS LIKELY TO FREEZE.
E. ALL BRANCH CONNECTIONS SHALL BE MADE ON THE TOP OR SIDE OF HORIZONTAL LINES.
F. GAS PIPING SHALL NOT BE RUN IN OR THROUGH SUPPLY AIR DUCTS, CLOTHES CHUTES, CHIMNEYS, VENTS, DUMBWAITERS, OR ELEVATOR SHAFTS.
G. VALVES, UNIONS OR RUNNING THREAD SHALL NOT BE LOCATED IN ANY AIR PLENUM.

2.05 CONDENSATE DRAINS & INDIRECT WASTES:

A. CONDENSATE DRAINAGE AND INDIRECT WASTE PIPING SHALL BE TYPE "L" COPPER WITH 95%-5% ANTIMONY/TIN SWEAT JOINTS.

2.06 PIPE HANGERS AND SUPPORTS:

A. PROVIDE NECESSARY STRUCTURAL MEMBERS, HANGERS AND SUPPORTS OF APPROVED DESIGN TO KEEP PIPING IN PROPER ALIGNMENT AND PREVENT TRANSMISSION OF INJURIOUS THRUSTS AND VIBRATIONS. IN ALL CASES WHERE HANGERS, BRACKETS, ETC., ARE SUPPORTED FROM METAL DECKING AND/OR CONCRETE CONSTRUCTION, CARE SHALL BE TAKEN NOT TO WEAKEN DECKING AND/OR CONCRETE OR PENETRATE WATERPROOFING. ALL HANGERS AND SUPPORTS SHALL BE CAPABLE OF SCREW ADJUSTMENT AFTER PIPING IS ERECTED. HANGERS SUPPORTING PIPING EXPANDING INTO LOOPS, BENDS AND OFFSETS SHALL BE SECURED TO THE BUILDING STRUCTURE IN SUCH A MANNER THAT HORIZONTAL ADJUSTMENT PERPENDICULAR TO THE RUN OF PIPING SUPPORTED MAY BE MADE TO ACCOMMODATE DISPLACEMENT DUE TO EXPANSION.
B. BEAM CLAMPS – HANGERS SUPPORTED FROM FLOOR STEEL SHALL BE APPROVED I SMALLER SHALL BE C & P FIG.148 ADJUSTABLE BEAM CLAMPS. FOR PIPING 2 ½ INCHES BEAM CLAMPS. I BEAM CLAMPS FOR HANGERS SUPPORTING PIPE 2 INCHES AND AND LARGER, I BEAM CLAMPS SHALL BE WROUGHT STEEL. C & P FIG. NO. 268 OR EQUAL.
C. WHERE PIPING IS RUN NEAR THE FLOOR AND NOT HUNG FROM THE CEILING CONSTRUCTION BUT IS SUPPORTED FROM THE FLOOR, SUCH SUPPORTS SHALL BE OF PIPE STANDARDS WITH BASE FLANGE AND ADJUSTABLE TOP YOKE SIMILAR TO F & S FIG. NO. 907 OR EQUAL.
D. ALL VERTICAL PIPING SHALL BE ANCHORED BY MEANS OF HEAVY STEEL CLAMPS SECURELY BOLTED OR WELDED TO THE PIPING, AND WITH END EXTENSION BEARING ON THE BUILDING.
E. ALL VERTICAL PIPING SHALL BE GUIDED AT EACH FLOOR BY USE OF CLAMPS FASTENED TO BUILDING STRUCTURE. PROVIDE 360 DEGREES PROTECTIVE SADDLE AT GUIDES. SADDLES SHALL BE FASTENED TO PIPE OR INSULATION.
F. VERTICAL RUNS OF PIPE NOT OVER 15 FEET LONG SHALL BE SUPPORTED BY HANGERS PLACED NOT OVER ONE FOOT FROM THE ELBOWS ON THE CONNECTING HORIZONTAL RUNS.
NOT OVER 6 INCHES IN SIZE OR NOT OVER 30 FEET LONG AND NOT OVER 12 INCHES
G. VERTICAL RUNS OF PIPE OVER-15 FEET LONG BUT NOT OVER 60 FEET LONG AND

IN SIZE, SHALL BE SUPPORTED ON HEAVY STEEL CLAMPS. CLAMPS SHALL BE BOLTED TIGHTLY AROUND THE PIPES AND SHALL REST SECURELY ON THE BUILDING STRUCTURE WITHOUT BLOCKING. CLAMPS SHALL BE WELDED TO THE PIPES OR PLACED BELOW COUPLINGS. CLAMPS SHALL BE TYPE 8, FEDERAL SPECIFICATION WW-H-171C, UNLESS OTHER TYPES ARE APPROVED.

HANGER RODS SHALL BE OF THE FOLLOWING DIAMETERS AND SPACING:

PIPE SIZE	ROD DIAMETER	MAX. SPACING
1-1/4 " AND BELOW	3/8 "	7'-0"
1-1/2" AND 2"	3/8 "	9'-0" COPPER (8'-0")
2-1/2 " AND 3	1/2"	11'-0" (COPPER 9'-0")
4 "	1/2"	14'-0"

H. PIPING SHALL NOT BE HUNG FROM OTHER PIPING, DUCTS, CONDUITS OR VERTICAL EXPANSION SHIELDS WILL BE PERMITTED. HANGER RODS SHALL NOT PIERCE DUCTS.
I. WHERE ADDITIONAL STEEL IS REQUIRED FOR THE SUPPORT OF HANGERS, FURNISH AND INSTALL SAME SUBJECT TO THE APPROVAL OF THE DESIGNER.
J. ALL PIPING RUNNING ON WALLS BE SUPPORTED BY MEANS OF HANGERS SUSPENDED FROM HEAVY ANGLE IRON WALL BRACKETS. NO WALL HOOKS WILL BE PERMITTED.
K. LATERAL BRACING OF HORIZONTAL PIPE SHALL BE PROVIDED WHERE REQUIRED TO PREVENT SIDE SWAY OR VIBRATION.
L. NO PIPING SHALL BE ASSEMBLED IN SUCH A MANNER AS TO HAVE DIELECTRIC ACTION BETWEEN FERROUS AND NON-FERROUS MATERIALS.

2.07

C MECHANICAL SYSTEM INSULATION – THE WORK COVERED BY THIS SPECIFICATION CONSISTS IN FURNISHING ALL LABOR, EQUIPMENT, ACCESSORIES AND MATERIALS AND IN PERFORMING ALL OPERATIONS NECESSARY FOR THE INSTALLATION OF THERMAL INSULATION FOR THE PLUMBING.

ALL COMPONENTS OF THE INSULATION FOR PIPING INCLUDING, FACINGS, MASTICS AND ADHESIVES, SHALL HAVE A FIRE HAZARD RATING NOT TO EXCEED 25 FOR FLAME SPREAD AND 50 FOR FUEL CONTRIBUTED AND SMOKE DEVELOPED. RATINGS SHALL BE AS DETERMINED BY UNDERWRITERS LABORATORIES, INCORPORATED, OR OTHER APPROVED TESTING LABORATORY IN ACCORDANCE WITH ASTME-84 REQUIREMENT.

ALL DOMESTIC HOT WATER LINES, HOT WATER RECIRC LINES, AND COLD WATER LINE SHALL BE INSULATED FROM THEIR SOURCE IN THE MECHANICAL ROOM, THROUGH THE CORRIDOR CEILING, TO EACH BRANCH IN THE CORRIDOR WALL WITH FLEXIBLE CLOSED-CELL POLYETHYLENE BY THERMACELL OR ARMAFLEX-2000. CHARACTERISTICS, K = .25 @ 75 DEGREES F. .01 WATER PERM. IN., 1/2" THICK.

END OF SECTION 15410

DIVISION 15 – MECHANICAL / PLUMBING
SECTION 15440 – PLUMBING FIXTURES

A. REFER TO PLUMBING FIXTURE SCHEDULE IN THE PLUMBING DESIGN CONSTRUCTION DOCUMENTS.

END OF SECTION 15440

CONTRACTOR SHALL FIELD VERIFY ALL EXISTING CONDITIONS AND DIMENSIONS PRIOR TO BID AND REPORT ANY DISCREPANCIES BACK TO OWNER. G.C. SHALL COORDINATE ALL SUB CONTRACTORS AND ENSURE A COMPLETE FULLY CODE COMPLIANT AND PROFESSIONALLY FINISHED TENANT SPACE.

ISSUED / REVISIONS:

ENGINEERING AND DESIGN PLLC
PO Box 213 (Mailing)
4236 HWY 3630
Annville, KY 40402
FIRM 23179
Phone (606)-364-2886
Fax (606)-364-5100
E-Mail: eric@emrengineers.com
Web Address: emrengineers.com

COLORADO REGISTERED PROFESSIONAL ENGINEER 36587 9.12.2023

BIDDING QUESTIONS CONTACT 920-757-1486

PERSPIRE SAUNA STUDIO

2450 SOUTH UNIVERSITY BLVD
SUITE D1
DENVER, CO 80210

CHECKED BY:	Staff
DRAWN BY:	Staff
DATE:	SEPTEMBER 12, 2023
SCALE:	PER PLAN
PROJECT No.:	PSS 2401

SHEET TITLE

PLUMBING SPECIFICATIONS

SHEET No.

4.05

RETURN AIR PLENUM

MATERIALS WITHIN PLENUMS. EXCEPT AS REQUIRED BY SECTIONS 602.2.1.1 THROUGH 602.2.1.6, MATERIALS WITHIN PLENUMS SHALL BE NONCOMBUSTIBLE OR SHALL HAVE A FLAME SPREAD INDEX OF NOT MORE THAN 25 AND A SMOKE-DEVELOPED INDEX OF NOT MORE THAN 50 WHEN TESTED IN ACCORDANCE WITH ASTM E 84 ORUL 723.
EXCEPTIONS:
1. RIGID AND FLEXIBLE DUCTS AND CONNECTORS SHALL CONFORM TO SECTION 603.
2. DUCT COVERINGS, LININGS, TAPE AND CONNECTORS SHALL CONFORM TO SECTIONS 603 AND 604.
3. THIS SECTION SHALL NOT APPLY TO MATERIALS EXPOSED WITHIN PLENUMS IN ONE- AND TWO-FAMILY DWELLINGS.
4. THIS SECTION SHALL NOT APPLY TO SMOKE DETECTORS.
5. COMBUSTIBLE MATERIALS FULLY ENCLOSED WITHIN CONTINUOUS NONCOMBUSTIBLE RACEWAYS OR ENCLOSURES, APPROVED GYPSUM BOARD ASSEMBLIES OR WITHIN MATERIALS LISTED AND LABELED FOR SUCH APPLICATION.

602.2.1.1 WIRING. COMBUSTIBLE ELECTRICAL OR ELECTRONIC WIRING METHODS AND MATERIALS, OPTICAL FIBER CABLE, AND OPTICAL FIBER RACEWAY EXPOSED WITHIN APLENUM SHALL HAVE A PEAK OPTICAL DENSITY NOT GREATER THAN 0.50, AN AVERAGE OPTICAL DENSITY NOT GREATER THAN 0.15, AND A FLAME SPREAD NOT GREATER THAN 5 FEET (1524 MM) WHEN TESTED IN ACCORDANCE WITH NFPA 262. ONLY TYPE OFNP (PLENUM RATED NONCONDUCTIVE OPTICAL FIBER CABLE) SHALL BE INSTALLED IN PLENUM-RATED OPTICAL FIBER RACEWAYS. WIRING, CABLE, AND RACEWAYS ADDRESSED IN THIS SECTION SHALL BE LISTED AND LABELED AS PLENUM RATED AND SHALL BE INSTALLED IN ACCORDANCE WITH NFPA 70.

SPRINKLER NOTES

A. GENERAL
1. THE SPRINKLER CONTRACTOR'S SYSTEM DESIGN ENGINEER SHALL SURVEY THE SITE PRIOR TO DESIGNING THE SPRINKLER SYSTEM.
2. THE DESIGNATED SPRINKLER CONTRACTOR AND HIS SPRINKLER DESIGN ENGINEER SHALL WARRANT THAT THE SYSTEM DESIGN COMPLIES TO THE FOLLOWING REQUIREMENTS:
THE SPRINKLER SYSTEM DESIGN AND INSTALLATION SHALL CONFORM TO NFPA-13 AND THE SPRINKLER SYSTEM SHALL BE DESIGNED AND INSTALLED IN A MANNER TO PRECLUDE ANY DAMAGE CAUSED BY A FAILURE OF THE SPRINKLER SYSTEM DUE TO ENVIRONMENTAL CONDITIONS. ENVIRONMENTAL CONDITIONS ARE TO INCLUDE, BUT NOT BE LIMITED TO TEMPERATURE (FREEZING AND EXCESSIVE HEAT), BUILDING SHELL EXPANSION/CONTRACTION CYCLES, AIR LEAKAGE, STACK EFFECTS, ETC. OCCURRING IN ANY PLENUM OR CAVITY WHERE THE SPRINKLER SYSTEM IS ROUTED.
3. THE SPRINKLER CONTRACTOR SHALL COORDINATE THE SPRINKLER SYSTEM DESIGN AND INSTALLATION WITH THE GENERAL CONTRACTOR TO INSURE SYSTEM FUNCTION.
4. THE GENERAL CONTRACTOR SHALL INSPECT THE ENTIRE EXPOSED INTERIOR BUILDING SHELL AS IT RELATES TO THE DEMISED SPACE PRIOR TO CONSTRUCTION. THIS IS TO VERIFY THAT THERE IS NO VOID OR PENETRATION OF THE BUILDING SHELL OR NON-INSULATED CONDITION WHICH WOULD ALLOW EXTERIOR EXPOSURE(S) TO AFFECT THE TEMPERATURE OF THE PLENUM WHERE THE SPRINKLER SYSTEM IS ROUTED.
5. THE GENERAL CONTRACTOR SHALL BE RESPONSIBLE FOR THE INSTALLATION OF FIREPROOF, INSULATED CLOSURES, EQUIVALENT TO THE BASIC STRUCTURE INSULATION VALUE, OF ANY VOID OR PENETRATION OF THE DEMISED SPACE PRIOR TO THE INSTALLATION OR MODIFICATION OF THE SPRINKLER SYSTEM OR PERMANENT FINISHED CLOSURES, I.E. CEILING, WALLS, ETC.
6. THE GENERAL CONTRACTOR SHALL WARRANT THAT THE BUILDING SHELL AS IT RELATES TO THE DEMISED SPACE SHALL BE INSULATED TO THE "R" VALUES DESCRIBED BY THE SHELL DESIGN DOCUMENTS.

B. SCOPE WORK:
1. THE CONTRACTOR SHALL FURNISH ALL LABOR, MATERIALS, EQUIPMENT, SERVICES, TOOLS, TRANSPORTATION, AND FACILITIES NECESSARY FOR, REASONABLY IMPLIED AND INCIDENTAL TO, THE FURNISHING, INSTALLATION, COMPLETION, AND TESTING OF ALL THE WORK FOR THE SPRINKLER SYSTEMS REQUIRED BY THE CONSTRUCTION DOCUMENTS AND AS REQUIRED BY JOB CONDITIONS, TO INCLUDE, BUT NOT BE LIMITED TO THE FOLLOWING:
   A. MODIFICATION OF EXISTING WET PIPE SPRINKLER SYSTEM AS REQUIRED TO PROVIDE COVERAGE IN ACCORDANCE WITH NFPA 13, LOCAL CODES, AND INSURANCE CARRIERS FOR THE OWNER.
   B. TAPS, RISERS, LATERALS, BRANCHES, VALVES, ALARMS, SPRINKLER HEADS, AND ALL COMPONENTS REQUIRED FOR A COMPLETE SYSTEM.
   C. DESIGN DRAWINGS, CALCULATIONS, SUBMITTALS, AND APPROVALS.
   D. PERMITS, FEES, AND CHARGES.
   E. TESTS AND TEST CERTIFICATES.
   F. COST FOR SHUT DOWN FEES.
2. THE CONTRACTOR THAT DOES THE ACTUAL SPRINKLER WORK IS REQUIRED TO BE A OWNER APPROVED SPRINKLER CONTRACTOR.
3. BEFORE STARTING WORK, THE CONTRACTOR SHALL EXAMINE THE ARCHITECTURAL, STRUCTURAL, MECHANICAL, AND ELECTRICAL PLANS AND SPECIFICATIONS TO SEQUENCE, COORDINATE, AND INTEGRATE THE VARIOUS ELEMENTS OF THE FIRE PROTECTION SYSTEM, MATERIALS, AND EQUIPMENT WITH OTHER CONTRACTORS TO AVOID INTERFERENCES AND CONFLICTS.
4. RELOCATION OF EXISTING MAINS, LATERALS, BRANCHES, AND RISERS TO FACILITATE SPACE DESIGN MUST BE INCLUDED IN BID PROPOSAL.

C. SHOP DRAWINGS
1. THE FIRE PROTECTION CONTRACTOR SHALL PREPARE DETAILED SHOP DRAWINGS AND CALCULATIONS For HIS WORK. SUBMIT SIX (6) COPIES TO GENERAL CONTRACTOR FOR APPROVAL. NO WORK SHALL BEGIN UNTIL OWNERS CONSTRUCTION MANAGER APPROVES HEAD AND PIPING LOCATIONS.
2. THE FIRE PROTECTION CONTRACTOR IS RESPONSIBLE FOR SUBMITTING COORDINATED DRAWINGS, CALCULATIONS, HEAT TYPES AND COLORS TO ALL AUTHORITIES HAVING JURISDICTION FOR APPROVAL. NO WORK SHALL BEGIN UNTIL ALL APPROVALS HAVE BEEN RECEIVED.

D. EQUIPMENT
1. SPRINKLER HEADS
   A. ALL SPRINKLER HEADS SHALL BE NEW (EXISTING HEADS SHALL BE REPLACED), U.L., F.M. LISTED AND APPROVED AUTOMATIC SPRAY TYPE AS MANUFACTURED BY CENTRAL SPRINKLER CO., GLOBE, GRINNELL, RELIABLE, STAR, OR VIKING.
   B. ALL SPRINKLER HEADS SHALL BE RATED FOR 165 DEGREES F UNLESS INDICATED OTHERWISE ON DRAWINGS OR REQUIRED BY LOCAL CODES.
   C. ALL SPRINKLER HEADS ARE TO HAVE A FACTORY APPLIED WHITE FINISH. VERIFY HEAD TYPES WITH TENANT'S CONSTRUCTION MANAGER AND SUBMIT WITH SPRINKLER DRAWINGS FOR PERMIT.

E. SPRINKLER HEAD TYPES SHALL BE AS FOLLOWS:
1. GYP. BD. & LAY-IN CEILINGS SHALL RECEIVE FULLY-RECESSED HEADS WITH TRIM RING. HEAD AND TRIM RING SHALL HAVE WHITE FINISH.
2. NOT USED.
3. NO CEILING - UPRIGHT HEADS: UPRIGHT HEADS SHALL HAVE STANDARD FINISH. NOTE: ALL HORIZONTAL SPRINKLER RUNS AT SIDEWALL SOFFITS SHALL BE CONCEALED WITHIN SOFFIT FRAMING.

E. GENERAL PIPING
1. THE EXISTING SPACE SHALL BE SPRINKLED OR A FIRE PROTECTION STUB-IN SHALL BE FURNISHED BY THE LANDLORD. SPRINKLER HEAD SPACING SHALL NOT EXCEED 130 SQ. FT. IN "SALES" AREAS AND 100 SQ. FT. IN "STOCK" AREAS. COMPLY WITH LANDLORD'S DESIGN CRITERIA. PIPE SIZING SHALL BE BASED ON NFPA ORDINARY HAZARD.
2. ALL SPRINKLER LINES SHALL BE INSTALLED TO AVOID INTERFERENCE WITH LIGHTS, DUCTS, PIPES, STORAGE DECK, ETC. FIRE PROTECTION CONTRACTOR SHALL PREPARE COORDINATED SHOP DRAWINGS INDICATING THE LOCATIONS OF LIGHTS, DUCTS, PIPES, AIR DEVICES, ETC. PRIOR TO INSTALLATION.
3. WHERE POSSIBLE, REWORK THE EXISTING SPRINKLER SYSTEM TO MEET THE NEW REQUIREMENTS OF THIS DESIGN. RELOCATE ALL MAINS AND BRANCHES INTERFERING WITH CEILING HEIGHTS, EQUIPMENT, LIGHTS, AND MAJOR COMPONENTS INCLUSIVE OF ADJACENT TENANTS AND MALL COMMON AREAS. REMOVE ALL UNUSED PIPING.
4. LOCATIONS OF ALL HEADS SHOULD BE APPROVED BY THE LOCAL FIRE PROTECTION OFFICIAL AND THE TENANT'S CONSTRUCTION MANAGER BEFORE INSTALLATION. HEADS MUST BE LOCATED IN THE CENTER OF CEILING TILES AND IN A SYMMETRICAL PATTERN WITH OTHER CEILING FIXTURES. ADDITIONAL MONIES WILL NOT BE ALLOCATED FOR ADDITIONAL HEADS REQUIRED BY FIELD FIRE INSPECTOR AFTER BIDS ARE ACCEPTED.
5. PROVIDE AND INSTALL A VALVED TEST CONNECTION FOR THE SPRINKLER SYSTEM AS REQUIRED OR REQUESTED BY THE MALL, LOCAL INSPECTOR, OR INSURANCE CARRIER. COORDINATE LOCATION WITH TENANT'S CONSTRUCTION MANAGER AND LOCAL FIRE PROTECTION OFFICIAL PRIOR TO ROUGH-IN.
6. SPRINKLER HEADS LOCATED IN STOCK, CORRIDOR, OR TOILET ROOM CEILINGS OR WALLS BELOW 8 FEET ABOVE THE FINISHED FLOOR ARE TO BE PROTECTED WITH APPROVED GUARDS.

F. PIPING:
1. SCHEDULE 40, BLACK STEEL PIPE, ASTM A-53 FOR FERROUS PIPING, WELDED AND SEAMLESS, ANSI B-36-10-70 FOR WROUGHT STEEL PIPE.
2. CAST IRON OR MALLEABLE IRON SCREWED FITTINGS FOR PIPES 2 INCHES AND SMALLER. SCREWED OR CAST IRON FLANGED JOINTS FOR PIPES LARGER THAN 2 INCHES.
3. GALVANIZED OR BLACK MALLEABLE IRON WITH BRASS SEAT SCREWED UNIONS FOR PIPES 2 INCHES AND SMALLER.
4. VICTAULIC TYPE COUPLINGS ARE ACCEPTABLE, WHERE APPROVED BY THE AUTHORITIES HAVING JURISDICTION AND THE LANDLORD.

G. TESTS
1. WHEN COMPLETED, THE ENTIRE FIRE PROTECTION PIPING SYSTEM SHALL BE HYDROSTATICALLY TESTED AS REQUIRED BY THE RULES AND REGULATIONS OF THE AUTHORITIES HAVING JURISDICTION. SYSTEM SHALL SHOW NO SIGNS OF LEAKAGE OR OTHER DEFECTS. THE CONTRACTOR SHALL BE RESPONSIBLE FOR DAMAGE TO THE WORK OF THE OTHER CONTRACTORS OR TO THE BUILDING, OR TO ITS CONTENTS, PEOPLE, ETC. CAUSED BY LEAKS IN ANY OF THE EQUIPMENT INSTALLED BY HIM. ALL REPAIRS OR REPLACEMENT OF DAMAGES SHALL BE AT THIS CONTRACTOR'S EXPENSE.
2. PROPERLY COMPLETED AND SIGNED "SPRINKLER CONTRACTOR'S MATERIAL AND TEST CERTIFICATES" SHALL BE FURNISHED TO THE LANDLORD, AUTHORITIES HAVING JURISDICTION, AND TENANT'S CONSTRUCTION MANAGER.

SYMBOLS LEGEND

SYMBOL / ABBREVIATION	DESCRIPTION
⊙	FULLY CONCEALED SPRINKLER HEAD (FINISH TO MATCH ADJACENT SURFACE)

NOTE

THIS DRAWING IS FOR REFERENCE ONLY.

TENANTS GENERAL CONTRACTOR AND/OR HIS/HER SPINKLER SUBCONTRACTOR TO HIRE A LOCAL SPINKLER/FIRE PROTECTION ENGINEER (UNLESS SUCH WORK IS COMPLETED BY A QUALIFIED INDIVIDUAL WORKING DIRECTLY FOR THE SPINKLER SUBCONTRACTOR, IF ALLOWED BY LAW/CODE) TO ENGINEER A SPRINKLER SYSTEM WHICH THIS SAME CONTRACTOR IS TO FURNISH AND INSTALL NEW OR MODIFY EXISTING AS REQUIRED, MEETING ALL LOCAL CODES AND FIRE MARSHALL REQUIREMENTS.

SPRINKLER SYSTEM TO BE INSTALLED THROUGHOUT SPACE INCLUDING ALL CLOSETS.
SPRINKLER CONTRACTOR TO SUBMIT PLANS, SHOP DRAWINGS AND CALCULATION TO FIRE DEPARTMENT FOR APPROVAL.
SYSTEM SHALL COMPLY WITH CURRENT NFPA-13

SEPARATE PERMIT AND REVIEW WILL BE REQUIRED FOR ANY FIRE PROTECTION SYSTEM WORK. G.C. TO ENSURE SEPARATE SUBMITTAL FIRE MARSHALL REQUIREMENTS.

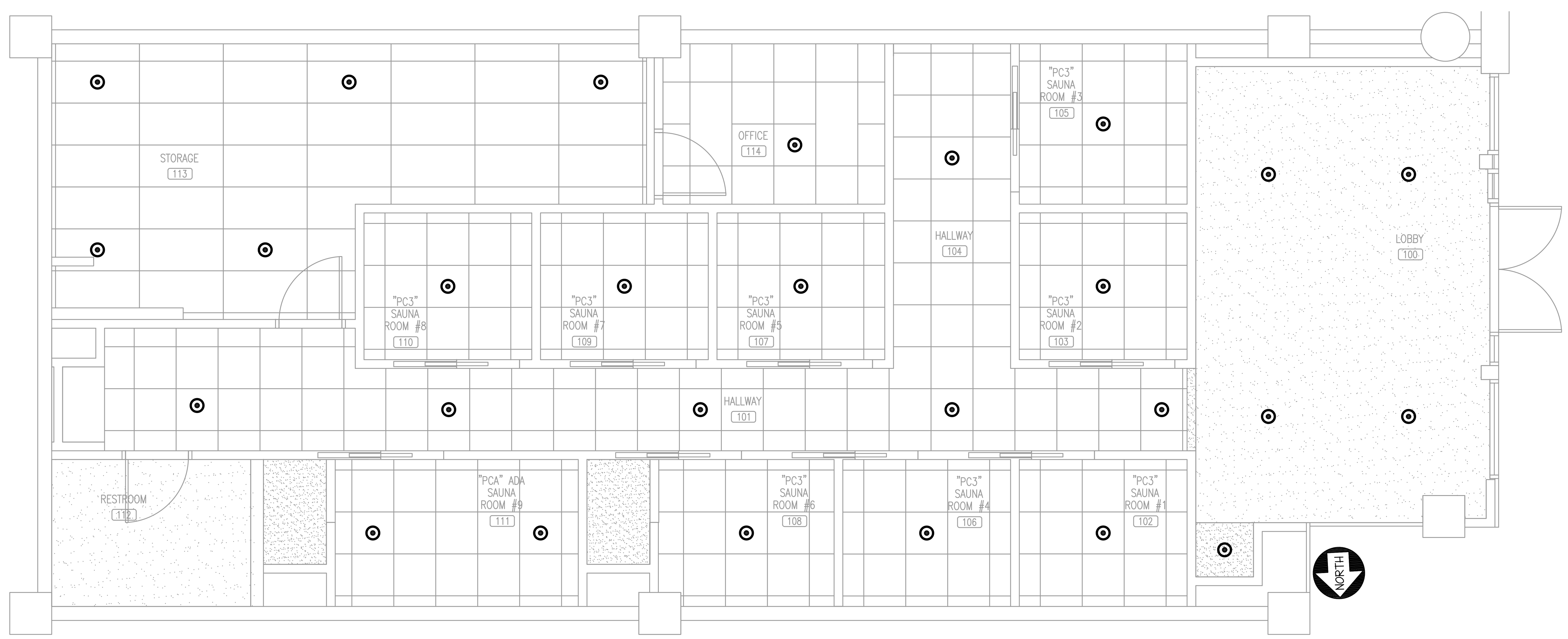

SCHEMATIC SPRINKLER HEAD LAYOUT
SCALE: 1/4"=1'-0"

CONTRACTOR SHALL FIELD VERIFY ALL EXISTING CONDITIONS AND DIMENSIONS PRIOR TO BID AND REPORT ANY DISCREPANCIES BACK TO OWNER. G.C. SHALL COORDINATE ALL SUB CONTRACTORS AND ENSURE A COMPLETE FULLY CODE COMPLIANT AND PROFESSIONALLY FINISHED TENANT SPACE.

ISSUED / REVISIONS:

ENGINEERING AND DESIGN PLLC
PO Box 213 (Mailing)
4236 HWY 3630
Annville, KY 40402
FIRM 23179
Phone (606)-364-2886
Fax (606)-364-5100
E-Mail: eric@emrengineers.com
Web Address: emrengineers.com

COLORADO REGISTERED PROFESSIONAL ENGINEER 36587 9-12-2023

BIDDING QUESTIONS CONTACT 920-757-1486

PERSPIRE SAUNA STUDIO
2450 SOUTH UNIVERSITY BLVD
SUITE D1
DENVER, CO 80210

CHECKED BY:	Staff
DRAWN BY:	Staff
DATE:	SEPTEMBER 12, 2023
SCALE:	PER PLAN
PROJECT No.:	PSS 2401

SHEET TITLE
SCHEMATIC SPRINKLER HEAD LAYOUT

SHEET No.
5.01